CAMPUS LANDSCAPE VISION & SITE STANDARDS

prepared by

CAROL R JOHNSON ASSOCIATES INC

December 2012

site standards updated

January 2018

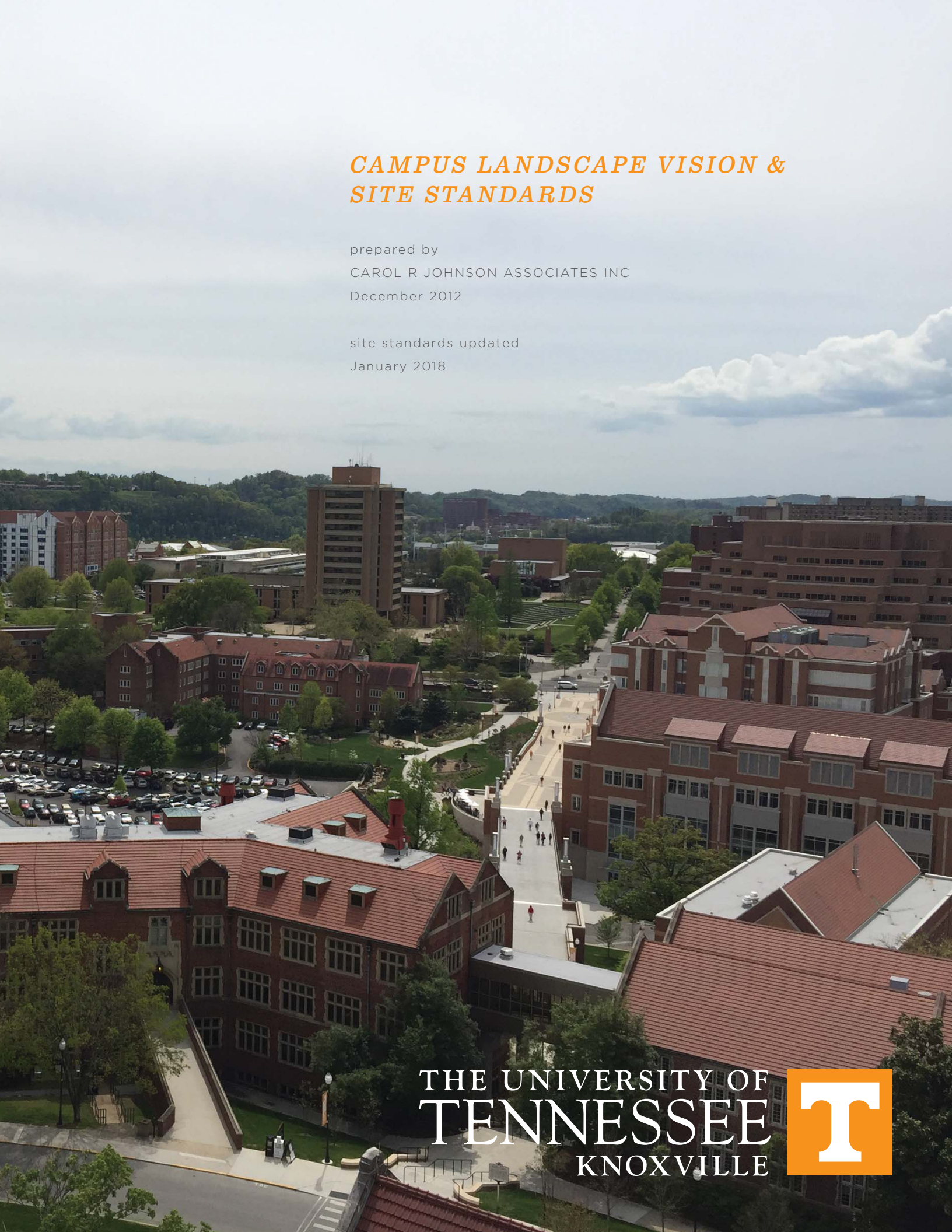

THE UNIVERSITY OF TENNESSEE KNOXVILLE

ACKNOWLEDGEMENTS

The Campus Landscape Vision and Site Standards would not have been possible without the leadership and feedback from the Landscape Advisory and Technical Committees and Facilities Services.

Landscape Advisory Committee
Bill Bruce, Community Advisor
Ileen Cheek, Community Advisor
Chris Cimino, Vice Chancellor for Finance and Administration
Dr. Sue Hamilton, Director of UT Gardens
Natalie Haslam, Community Advisor

Landscape Technical Committee
Brad Collett, Assistant Professor, Interim Chair, Landscape Architecture
Rodney Combs, Assistant Director for Facilities and Services, University Housing
Jason Cottrell, General Superintendent, Facilities Services, Ex Officio
Dave Irvin, Associate Vice Chancellor, Facilities Services
Ken McFarland, Lecturer, Biology
Bethany Morris, Landscape Designer, Facilities Services, Ex Officio
Margie Nichols, Vice Chancellor, Communications
Andy Pulte, Lecturer, Plant Sciences
Curtis Stewart, Associate Professor, Plant Sciences
John 'Spike' Tickle, Community Advisor for College of Engineering
Kevin Zurcher, Assistant Athletics Director, Athletics

Contributors
Gordie Bennett, Sustainability Manager, Facilities Services
Bob Caudill, Assistant Director of Building Services, Facilities Services
Garry Menendez, Associate Professor, Plant Sciences
Tracy Moir-McClean, Associate Professor, Architecture
Kenneth Townsend, Graduate Assistant MLA, Facilities Services
Jay Price, Environmental Coordinator, Facilities Services
Tim Tomlinson, General Superintendent of Electrical Services, Facilities Services
Samuel Warwick, Assistant Director of Steam Plant, Facilities Services
Wes Willoughby, Construction Inspector Capital Project Management, Facilities Services

TABLE OF CONTENTS

CAMPUS LANDSCAPE VISION

SITE STANDARDS

INTRODUCTION

"The enjoyment of scenery employs the mind without fatigue and yet exercises it, tranquilizes it and yet enlivens it and thus, through the influence of the mind over the body gives the effect of refreshing rest and reinvigoration to the whole system."

- Frederick Law Olmsted, 1865

Ayres Hall, 1921

Since 1826 when the trustees selected a new home for the University on a promontory overlooking the Tennessee River, the University of Tennessee, Knoxville has grown in ways that have enhanced the character and quality of the campus, but it has also developed in ways that have diluted that character and have created a campus that does not consistently reflect the quality of the institution. As part of the recent initiative by UTK to become a Top 25 Public Research University, leadership at Tennessee's flagship campus have recognized that the quality of the campus plays a key role in achieving this goal. With 35% of the ranking of the top schools by U.S. News & World Report based on student retention and the caliber of the student body, it is critical that the University takes steps to shape a campus that supports its student community, that creates a cohesive and attractive setting for the University, and that attracts prospective students. The role that campus beauty plays in attracting students and in contributing to their happiness as a student is well documented. In short, academic excellence needs to be first manifested by excellence in the campus landscape in order to help advance the University to the ranks of the country's Top 25 Public Research Universities.

Morgan Hall, 1921

Today the UTK campus falls short of reflecting excellence in the landscape. The recent publication by the Princeton Review of its college and university rankings placed UTK as #6 on its list of Least Attractive Campuses. Based on scores that the current study body gives to the campus in response to the question, "How beautiful is your campus?" the Princeton Review's rankings are highly influential in prospective students' selection of their future schools and provides the University with a strong incentive to enhance the beauty of the campus, particularly along the route that prospective students are take on campus tours. *See APPENDIX A for a map of the student orientation route.*

In reviewing those colleges deemed by their students to be beautiful, commonalities emerge. Well-kept lawns and mature trees, the elements of the quintessential American campus, are a common denominator. The campuses are wonderful places for people, maximizing pedestrian connections and spaces over vehicular routes and keeping parked vehicles apart from pedestrian spaces. But in addition to these elements, the beautiful campuses also have a distinctive character, be it architectural or landscape, that sets the campus apart, that makes it unique and memorable, that gives it a strong sense of place, and gives its community a sense of pride.

The original site for the University provided that distinctive character. In 1891 the President of the University contacted the Olmsted Associates, a prestigious landscape architectural firm and the successor to the practice of Frederick Law Olmsted. In his letter, President Dabney wrote, "We are thinking of improving our college campus, which consists of about thirty acres and covers a prominent hill overlooking the Tennessee River, in the suburbs of the city of Knoxville....It could be a beautiful place and deserves to be, as nature has favored us wonderfully in the location...." While the Olmsted firm was never contracted to work on the

campus, the presence of many state champion trees and other large mature specimens on campus today suggests that the enhancement of the campus landscape has been undertaken through the years.

In the last twenty years, three master planning initiatives have been undertaken to guide development on the UTK campus. This document, an articulation of a vision for the campus landscape through the presentation of design guidelines and site standards for the University, has been written to complement the 2011 Long Range Master Plan and addresses the same areas of the campus. See Figure 1 on the next page and in APPENDIX A for the 2011 Master Plan. This companion document seeks to ensure that the implementation of the master plan results in a cohesive landscape that communicates the academic excellence of UTK and that provides a comfortable and attractive home for the University community.

Figure 1: Build Out Master Plan by Phase from the 2011 Long Range Master Plan

VISION EVOLUTION

In the spring of 2012, Carol R. Johnson Associates began work to articulate a campus landscape vision for the University of Tennessee, Knoxville and the University of Tennessee Institute of Agriculture. Working with the Landscape Technical Committee through group and individual meetings, input was gathered and integrated into recommendations that were presented to the Landscape Advisory Committee. Input from members of Facilities Services was also solicited via a campus workshop, in recognition of the role that maintenance, careful design, and material selection play in creating high-quality landscapes that convey University excellence.

Input from student representatives was also solicited to inform the creation of a design for the Presidential Courtyard. This residential space was one of four priority areas identified by both Committees as key site improvement projects to be undertaken by the University as an initial application of the campus landscape vision guidelines and site standards. These four projects, as all future projects on the campus, will be subject to review by the newly-formed Campus Planning and Design Committee. The Committee will serve to ensure adherence to the 2011 Long Range Master Plan as well as the Campus Landscape Vision and Site Standards.

Ayres Hall South Lawn serves as the standard of landscape quality for UTK

A key pedestrian connection on campus between McClung Tower and the theatre buildings

Typical UTK campus gateway at the western entry to campus

CAMPUS LANDSCAPE VISION

The campus landscape vision for the University of Tennessee, Knoxville is rooted in its setting within the beautiful eastern Tennessee landscape and its founding origins as Tennessee's land grant university. In the nearly two hundred years since the University first began to develop on this site above the Tennessee River just west of downtown Knoxville, the influence of these two factors on the character of the campus has diminished as rapid expansion and the accommodation of the automobile has dominated University development. This trend is far from irreversible – the development of this document and its implementation marks the beginning of a new era in the life of the University. The campus landscape vision described in this document is a move toward a campus that is first and foremost a learning environment – a campus that supports its community with spaces conducive to learning, and also serves as an outdoor laboratory for horticulture and natural resource stewardship. The landscape vision is also a move to a campus that is pedestrian centered rather automobile focused and that further supports learning by promoting interactions and healthy movement within the campus. And the vision for the campus landscape includes a move toward a stronger contribution to a healthier ecosystem for Knoxville, employing sustainable practices and seeking opportunities to incorporate the Eastern Tennessee landscape into the campus.

This vision for the University landscape – a campus that is rooted in its setting in the rich Eastern Tennessee landscape, its founding as a land grant institution with its attendant emphasis on an understanding and stewardship of the land, and its academic mission to embody excellence – is described in this document through the articulation of five guiding principles. These five principles are employed to serve as the framework for design guidelines that, along with the 2011 Long Range Master Plan, can provide a road map for the evolution of the campus landscape.

TYPICAL CAMPUS SPACES

The following list of typical campus spaces comprise the open-space network at UTK. Design guidelines related to each of these types of spaces are also presented in this document. The ten typical campus spaces are:

1. Edges and Boundaries
2. Gateways and Entrances
3. Plazas
4. Quadrangles
5. Pedestrian Malls
6. Great Lawns
7. Streetscapes
8. Surface Parking
9. Spaces Between and Behind Buildings
10. Environmentally-Sensitive Areas

PRIORITY PROJECTS

Four priority projects have been undertaken as part of this effort to illustrate the application of the campus landscape vision guidelines to selected campus spaces. These projects were selected as the spaces that would have the most transformative impact on campus for prospective students as well as the UTK community. *See APPENDIX B for the plans for these priority projects.*

1. Perkins-Ferris Quad
2. Presidential Courtyard
3. Pedestrian Mall Extension - West and Environs - East
4. Volunteer Boulevard

Presidential Courtyard - one of the four Priority Projects

SITE STANDARDS

The second part of this document, following the articulation of the campus landscape vision, serves as an update of the 2001 Site Design Guidelines. It has been reorganized to consolidate sections and updated to include furnishings and materials that were not included in the previous version. This part of the document provides the technical aspects and application standards for the products and materials used to complete a unified campus vision. By selecting and implementing sustainable, environmentally-sensitive and durable products and materials, a consistent campus aesthetic will be achieved.

1. Site Paving
2. Site Furnishings
3. Site Lighting
4. Site Signage
5. Plantings and Soils
6. Service Areas and Utilities

Campus standard bench

Campus standard table and chairs

How to Use the Campus Landscape Vision and Site Standards

The guidelines described herein are not intended to be prescriptive, but rather descriptive, of a design approach that will guide the University toward the landscape vision for the campus. This document has been developed to be a tool to aid in its transition.

At the outset of campus projects, during the programming phase, the guidelines are intended to aid University administration in defining the project scope. It is critical that project limits be set correctly at the beginning of any project so that project site budgets accurately reflect a project scope that will truly contribute to a cohesive campus rather than a patchwork of individual projects. The campus vision described herein, through principles, goals, and guidelines, along with the involvement of landscape architectural consultants and University staff landscape architects within Facilities Services will contribute to the setting of a proper and adequately comprehensive scope for campus projects.

As a campus project moves into the design phases, this document is intended for use by design professionals, landscape architects with Facilities Services, and the newly-formed Campus Planning and Design Committee (CP+DC) to ensure that the project will contribute to a cohesive campus. The CP+DC has been created to provide oversight for all campus projects. They will review the submitted design documents for compliance with the design guidelines and site standards and require justification for elements that deviate from this document. A checklist has been included in APPENDIX C for the CP+DC's use in reviewing campus projects. Following the review and acceptance by the CP+DC, the project will be recommended to the Chancellor for final approval.

As with all master planning documents, this Campus Landscape Vision and Site Standards is intended to be a living document, and will thus be amended by the University to reflect product changes and updates as they arise.

This Campus Landscape Vision and Site Standards document has been written to communicate the campus landscape vision to the University community and future design teams as well as to provide the Campus Planning and Design Committee with a tool for their review of all campus projects going forward. By following the principles and standards outlined in this document, a cohesive and unified campus landscape will emerge through the completion of individual projects.

It is recommended that the Campus Landscape vision and Site Standards be adopted as Appendix 5 of *The University of Tennessee Designers' Manual*, revise Article 2-1-4 of the Standard Terms and Conditions for Agreements that *The University of Tennessee Designers' Manual* be provided by the Owner and contractually binding and add Campus Planning and Design Committee review of projects during Programming, Schematic Design and Design Development to *The University of Tennessee Designers' Manual* or as a term in Articles 2-1-8 through 2-1-22 of the Standard Terms and conditions for Agreements.

PROJECT PROGRAMMING

Prior to embarking on any campus project, Facilities Services, University administration, and design consultants will collaborate to define the project scope and budget. Key to the success of the project will be the accurate assessment of the project limits by landscape architectural consultants and landscape architects within Facilities Services to ensure that the new project is fully integrated into the campus, that it is united with existing successful campus spaces, and that it enhances those adjacent spaces that fall short of the campus vision. The practice of setting project limits only in relation to the new building does not result in a cohesive campus but rather an assemblage of isolated projects; project limits may need to be expanded to include portions of previous projects that prevent the integration of the new project or that will undermine its success.

With the project limits accurately set, elements within the project area that must be preserved – heritage or documented champion trees and landscape or architectural elements – are then identified and their associated square footages are removed from the total project area. Champion Tree documentation can be found at the State Department of Agriculture website (http://www.tn.gov/agriculture/forestry/championtrees.shtml) and located with the assistance of University of Tennessee Facilities Services staff. The University of Tennessee Campus Heritage Plan can be used to identify any significant items to be protected. Finally, with the identification of the proposed building footprint, the application of compiled square footage costs to the net project area produces the site improvement budget for the project. The inclusion of the site improvement budget in the early planning of the project is key to ensuring a successful campus project.

Construction signage for the campus

CAMPUS PLANNING AND DESIGN COMMITTEE REVIEW

The Campus Planning and Design Committee (CP+DC) was formed to oversee all campus projects in an effort to bring unity to the campus. Review of all new construction and renovation projects will fall under the oversight of this committee to ensure that projects adhere to the Campus Landscape Vision and Site Standards. It is not the role of the Committee, whose members come from various departments and colleges across the campus, to dictate design, but to ensure that the campus landscape vision is realized. It is strongly encouraged that a professional landscape architect author plans and/or apply for review with the committee of any university project.

To facilitate the review process by the CP+DC, the landscape vision guidelines and site standards have been compiled as a checklist, which can be found in APPENDIX C of this document. The submission of design documents for review by the CP+DC will be required for all campus projects at specific project milestones.

While the Campus Landscape Vision and Site Standards are provided to bring unity to the campus landscape, it is understood that some circumstances may require deviation. If this is the case, justification for the deviation and verification that it will contribute to a cohesive campus landscape must be made to the CP+DC for acceptance at the end of Programming and Schematic Design. The Design Development review will be used to confirm previous reviews. At the completion of their review, the CP+DC will recommend the project to the Chancellor for final acceptance.

REPLACING NON-STANDARD FURNISHINGS AND MATERIALS

One of the steps in the creation of a cohesive landscape is to replace non-standard furnishings and materials across the campus. Some deviations will not be replaced because of historical significance or context. This determination will rest with the CP+DC. If the furnishing or material is proposed to be replaced with a non-standard material or product, proper justification shall be made to the CP+DC for review of the proposed product.

BASELINE CRITERIA AND BUDGETING TOOLS

All new construction and renovation projects will be required to meet minimum standards for site improvement costs. As part of this effort, site improvement SF costs have been compiled to aid in the setting of appropriate site improvement budgets for campus projects. *See APPENDIX C for theses SF costs.* These costs were developed to reflect the principles and site standards identified in this document.

Campus Beautification funds are one resource used for campus improvements. These funds are accrued through student fees and used to improve the campus landscape.

Grants shall be investigated for all campus projects. The University has a department that submits grants on the University's behalf. The Office of Research handles the majority of grant writing for the University.

Office of Research
Website: http://research.utk.edu/

Fundraising opportunities are critical to the success of capital projects on campus. Opportunities to contribute to campus initiatives are handled by Alumni Affairs & Annual Giving.
Office of Alumni Affairs
Website: http://alumni.utk.edu/

See APPENDIX C for the addresses for these two University offices. Current phone numbers can be obtained from University information services, 865-974-1000.

The landscape vision for the University of Tennessee, Knoxville's campus presented in this document is described through five guiding principles. The articulation of these five principles represents the combined effort of University community members and consultants to identify the key steps that must be undertaken by the University to achieve a beautiful campus that is rooted in its setting in the rich Eastern Tennessee landscape, its founding premise as a land grant institution with its attendant emphasis on an understanding and stewardship of the land, and its academic mission to embody excellence. Each of the five principles are interrelated in their role in shaping the landscape vision; there is no hierarchy to the listing, and each principle informs all others.

To facilitate the embracing of these five principles by the University and its design consultants, the principles have been further subdivided into three supporting goals, and together the principles and goals provide a framework for organizing the design guidelines that will inform the future development of the campus. The guiding principles and goals articulate the campus landscape vision for the University; the guidelines identify the actions that need to be undertaken to ensure that the campus landscape vision becomes a reality.

The campus topography provides a memorable setting for Ayres Hall

An enhanced space at Clement Hall interconnects the White Avenue Garage with the campus core

FIVE PRINCIPLES OF THE CAMPUS LANDSCAPE VISION

Principle One: Building Siting

Reinforce the University's identity and the unique setting of the UTK campus – its topography, the river, the distant hills, and its historic structures – with thoughtfully sited buildings. *New construction and renovation projects on campus must be sited to reinforce the campus character and engage the campus topography and setting to create connections and spaces outside the building that are as positive as those within.*

- Site buildings to use topography and other resources to enhance the campus landscape
- Site buildings to shape successful campus spaces
- Site buildings to strengthen campus connections

Principle Two: Campus Spaces

Enrich the University with a comprehensive network of campus spaces that reflect the University's mission to embody excellence in learning. *Approach the design of campus spaces in a comprehensive manner – prime consideration must be the space's contribution to the entire campus open space system and the embodiment of excellence, not the enhancement of a particular building.*

- Create a campus network of spaces
- Enhance the campus as a place for learning
- Create successful campus spaces

Principle Three: Campus Connections

Optimize campus pedestrian connections above all others. *Campus landscapes are, above all, places for people; in order for the campus to be perceived as a cohesive, welcoming, and attractive space befitting a Top 25 Public Research University, its pedestrian connections must be positive ones, vehicular connections must be downplayed, and alternative transportation promoted.*

- Reinforce campus pedestrian connections
- Minimize the impact of vehicles on campus - design streetscapes and vehicular zones for pedestrian comfort
- Enhance alternative transportation on campus

An attractive connector from Ayres Hall to Dabney-Buehler Hall

Principle Four: Campus Plantings

Enhance all campus spaces and connections with healthy, well-sited, and well-maintained plantings and turf. Campus plantings play a critical supporting role in shaping successful campus spaces and connections; the health, performance, and maintenance level of those plantings and lawns are essential to providing the UTK campus with a high-quality image that is reflective of its Eastern Tennessee setting and land grant heritage.

- Create a cohesive and coherent landscape that reflects the heritage and setting of the UTK campus
- Shape campus spaces with plantings
- Create high quality and high performance landscapes

High-quality plantings at Morgan Hall

Principle Five: Sustainability

Augment the integrity and performance of the campus landscape by employing sustainable practices. *Authentic participation in higher education programs to advance environmental responsibility must guide all campus development.*

- Implement sustainable landscape principles and practices
- Support sustainable practices for construction and maintenance
- Encourage and support sustainable practices by the UTK community and showcase sustainable elements as they are incorporated into the campus

Subsurface sustainable practices at Gate 21

GUIDELINES FOR PRINCIPLE ONE: BUILDING SITING

Reinforce the University's identity and the unique setting of the UTK campus—its topography, the river, the distant hills, and its historic structures—with thoughtfully sited buildings. *New construction and renovation projects on campus must be sited to reinforce the campus character and engage the campus topography and setting to create connections and spaces outside the building that are as positive as those within.*

The campus topography is a key asset for UTK

The reasons for the selection of the promontory along the Tennessee River for the campus of today's University of Tennessee, Knoxville are not difficult to imagine—the dramatic topography and the views to the water and the hills beyond continue to give the campus a unique and memorable setting to this day. It is critical to the character of the UTK campus that these two unique characteristics and the site's historic structures be maintained as the campus grows and develops so that the campus remains rooted in its Eastern Tennessee setting. While all campus improvements present an opportunity to celebrate the University's setting, campus buildings play the greatest role in determining whether the topography is used to advantage or whether it becomes a liability to the campus, its spaces, and its connections.

The following design guidelines address the siting of buildings on the UTK campus with respect to the campus setting, the spaces created, and the connections formed. While the guidelines may specifically reference new buildings, building renovation projects present opportunities to correct previous shortcomings of building siting and design; thus, all of the following guidelines should apply to both new buildings and building renovation projects.

Site buildings to use topography and other resources to enhance the campus landscape

- Site and design new buildings so that they do not compromise the integrity of valuable campus resources—historic structures, mature campus trees, campus landforms, historic campus traditions, and views to the river or the hills beyond.
- Site and design new buildings so that they do not diminish the value of the campus' cultural resources. While currently no historic districts have been registered on campus, the earliest structures and the Indian Mound represent easily recognized resources that need to be respected. *See The University of Tennessee Campus Heritage Plan.*
- Site and design new buildings to preserve existing healthy and mature campus trees, recognizing the time required to replace mature trees, their importance in creating successful campus spaces, and the role that their shade plays in reducing energy consumption.
- Site and design new buildings to create outdoor spaces that benefit from a passive solar response without compromising the passive solar response of existing spaces.

- Site and design new buildings to incorporate distant views of the river and hills into the lives of the campus community and integrate the campus into its Eastern Tennessee setting.

- Site and design new buildings to maintain important views through campus. *See Figure 2 below and in APPENDIX A.*

- Site and design buildings on sloping sites so that the structure functions as a site retaining wall, creating positive at-grade connections for building entrances and common spaces on any side of the building.

- Site and design buildings on sloping sites so that the provision of daylight to interior spaces does not require the use of window wells or large depressed areas adjacent to the building. *The grade at the front of the Haslam Business Building is one floor above the grade at the rear, allowing both faces to engage directly with the campus. The grades at the north and south sides of Humes Hall reflect a differential of two stories that is not reflected in the architecture, creating a canyon on the north side.*

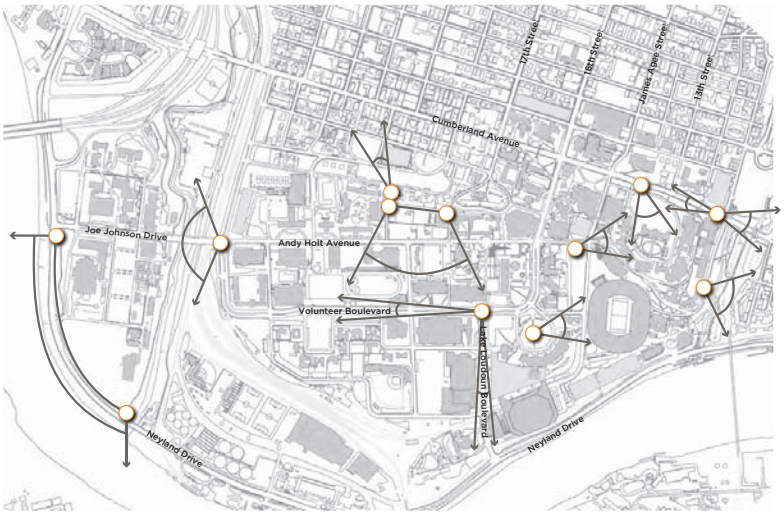

Figure 2: Campus Views

At grade connections on all sides of the Haslam Building

The canyon formed on the north side of Humes Hall

Site buildings to shape successful campus spaces

- Site new buildings to be compatible with the land planning and site design objectives of the campus master plan, furthering the creation of a campus network of spaces.

- Site campus buildings in a manner that reflects their role as shapers and definers of the campus landscape, the glue that holds the campus together. Site campus buildings to create spaces outside the building that are as positive and welcoming as those within.

- Site and design new buildings so that interior common spaces are located where they can enliven and support exterior gathering spaces, and link the indoor and outdoor spaces with glazing and entrances.

- Site and design buildings on sloping sites to create positive exterior

spaces that are activated by building entrances on various levels. Where topography requires an exterior space to span several different levels, ensure that the lowest level is activated by a major building entry.

- Design new buildings to provide views to significant campus spaces, thereby reinforcing and enhancing the value of those spaces.

- Avoid, where possible, locating entrances where a mixture of sun and shade cannot be provided; this is especially important where the building's function calls for the creation of a major gathering space outside the entrance, so that the users of the space can enjoy the benefits of the space's passive solar response. Avoid the siting and design of buildings where they would compromise the passive response of existing adjacent spaces.

- Locate and organize building entrances so that the routes between entrances and other destinations will not require a multitude of paved ways that will compromise the integrity of the adjacent campus spaces.

- Locate service/utility spaces where they will not create an incompatible juxtaposition with building entrances and with existing or proposed gathering spaces. *The improvements proposed for the Perkins-Ferris Quad Priority Project include the reorientation of the dumpster enclosure at the Science and Engineering Building so that the dumpster does not intrude into this proposed heart of the College of Engineering. See the plan for this priority project in APPENDIX B.*

- Extend building project limit lines as necessary to include adjacent existing spaces that are of a quality that will undermine the success of exterior spaces proposed by the new building project and to integrate the spaces. A cohesive, interconnected campus cannot be achieved by isolated projects. Recognize the opportunity that each project offers to knit its portion of campus together. Ensure that a comprehensive approach is taken toward defining the project limits and setting the project budget through the involvement of landscape architectural consultants and staff within Facilities Services. *See the description of the programming effort under PROCESS.*

The entry to Clement Hall activates the connection from the White Avenue Garage

The entry to Shelbourne Towers relates to vehicular, not pedestrian, routes

Site buildings to strengthen campus connections

- Set finish floor elevations and locate entrances for new buildings that will allow for simple accessible connections to existing pedestrian routes. Where there are several pedestrian routes to consider, give a preference for those routes that are independent of vehicular routes. *The entry to Clement Hall faces the pedestrian connection from the White Avenue Garage to the campus core rather than 17th St. Shelbourne Towers, a former non-University apartment building, currently faces 20th St. Construction of a new dormitory on the site will allow the building to be redirected to the pedestrian link to Carrick Hall.*

- Site and design buildings on sloping sites to enhance campus accessibility by using interior corridors and elevators to create accessible connections between exterior spaces and buildings where those connections are impossible or difficult to make with exterior ramps.

- Set finish floor elevations and locate entrances for new buildings that will reinforce and strengthen the entrances to adjacent buildings through at grade connections; strive to keep the slope between the entrances less than 2% for plazas and 3% for walkways. Recognize that a significant grade differential will compromise the relationship between the two entrances. Try to avoid the use of bridges to make accessible connections between buildings.

- Site and design buildings to ensure that proposed service/utility spaces are adjacent to vehicular ways or can be accessed by paved routes that are first and foremost pedestrian ways. Locate building service areas in proximity to service areas for adjacent buildings, possibly achieving an economy of scale and minimizing the intrusion of service areas into the campus. *The service area for Hesler Hall is well-concealed behind masonry walls that are integrated into the building mass so that the major pedestrian route up to the Hill alongside this area is not compromised. The service area for Morrill Hall is located along a major pedestrian route to Carrick Hall and just outside the major gathering space for Morrill Hall, greatly compromising both.*

- Site residential buildings to accommodate routes for the semi-annual events of move-in/move-out days in a manner that does not compromise connections on the site for the remaining 363 days of the year.

- Extend building project limit lines to include the construction of new pedestrian linkages that become important by virtue of the location of new building entrances. A cohesive, interconnected campus cannot be achieved by isolated projects. Recognize the opportunity that each project offers to knit its portion of campus together. Ensure that a comprehensive approach is taken toward defining the project limits and setting the project budget through the involvement of landscape architectural consultants and staff within Facilities Services. *See the description of the programming effort under PROCESS.*

A well-integrated service area at Hesler Hall

An obtrusive service area at Morrill Hall

GUIDELINES FOR PRINCIPLE TWO: CAMPUS SPACES

Enrich the University with a comprehensive network of campus spaces that reflects the University's mission to embody excellence in learning. *Approach the design of campus spaces in a comprehensive manner – prime consideration must be the space's contribution to the entire campus open space system and the embodiment of excellence, not the enhancement of a particular building.*

A campus is the manifestation of the academic community it serves. It is critical, therefore, that the campus be comprised of a network of spaces that bespeaks a community of learners, with each space serving the purpose of supporting learners and fostering connections between them. With the thoughtful siting of buildings, campus spaces are provided with the key features of definition and activation by building edges and entrances. To ensure that these spaces are successful in supporting and reflecting the community, these spaces must also share a common vocabulary of elements, they must serve the unique needs of a learning community, and they must meet the social, psychological, and physical needs of the users.

The following design guidelines provide a framework for the creation of a comprehensive system of successful spaces for the UTK campus.

Create a campus network of spaces

Planting enhances Ayres Hall entry when viewed on axis

Planting obscures the entry when viewed from other angles

- Design spaces to contribute to a network of campus spaces by employing the campus site standards to achieve a consistency and familiarity from space to space. The majority of spaces should be uniform in treatment of paving, furnishings, and planting to serve as the glue of the campus, with only a few key spaces receiving a slightly higher quality of treatment. In general, limit the paving palette to concrete pavement so that the value of this palette is not devalued by the frequent introduction of special paving. *See the SITE STANDARDS for campus standard paving, furnishings, lighting, and signage.*

- Provide a clarity and comfortable rationality to the campus. Entrances to buildings should be a primary focus for navigating on campus; therefore, design entry spaces to support but not compete with or obscure the architectural definition of the building's entry. *The entry to Ayres Hall is framed by new planting at the flagpole when viewed on axis, but when viewed from other angles, this beautiful entry is obscured.*

- Enhance spaces with enrichment relevant to their setting and that give special meaning to the space without compromising the campus by the addition of too many focal points. Recognize that the proper sizing of a space can eliminate the need for a focal point, and that for many spaces on a college campus, often the most successful foci of a space will be the people in the space. Ensure that the space is properly sited, sized and accommodated so that the space becomes incorporated into the life of the community.

Enhance the campus as a place for learning

- Design campus spaces to extend the nurturing of learning and the learning community from inside the classroom out into the campus at large.

- Design building entry spaces to accommodate the informal, spontaneous meeting and gathering of community members that occurs at building entries. Design spaces to be broader than deep to convey a welcoming atmosphere and provide seating via walls and backless benches that are appropriate to short term seating. While the paving palette should, in general, be limited to concrete pavement, consider the incorporation of a reoriented or smaller module of scoring. *See the SITE STANDARDS for benches and paving.*

- Create spaces to accommodate informal studying and gathering by individuals and small groups. Locate these spaces adjacent to, but slightly removed from, pedestrian walkways, so that they are activated, but not disturbed by, the adjacent pedestrian activity. Ensure that a sufficient amount of space definition is inherent to the site to invite use. Accommodate seating with site walls as well as the standard tables and chairs and the campus standard benches with backs. Where possible, site benches in pairs at right angles to each other to promote gathering. Locate benches with backs where shade, desirable views, and sufficient enclosure can be provided. Ensure that spaces are technologically equipped and laid out for teaching paradigms. *The gathering/study area at the southeastern corner of Ayres Hall is invitingly located near, but slightly removed from, the adjacent walkway. The area at the rear of South College could become a successful small gathering area outside the cafe, but currently slopes too greatly and the seating type is inappropriate to the space.*

A successful small gathering area at Ayres Hall

A less successful gathering space at the back of South College

- Create spaces that can support the meeting of classes outdoors. In spaces adjacent to academic buildings, provide a shaded level lawn area that is slightly removed from pedestrian ways and that has some subtle suggestion of enclosure provided by the adjacent topography, low shrub plantings, or trees. Where appropriate, and where a wall can be appropriately incorporated into the larger landscape, provide a semi-circular wall of seating height to further accommodate an outdoor classroom. Ensure that spaces are technologically equipped and laid out for teaching paradigms.

- Create spaces that serve as a focus for a campus community, be it residential or academic. Provide pavement that is sized to accommodate the number of anticipated daily users rather than the occasional larger function, recognizing that empty paved areas can undermine a sense of community for the campus. Where possible, visually and spatially connect the paved spaces with open flat lawn areas used for informal active recreation or viewing. Enrich the space with gestures that reflect the character and nature of the particular community. Provide seating that is appropriate to the use of the space – benches with backs and tables and chairs for longer term use, backless benches and walls for shorter term and flexible use. *The improvements proposed for Presidential Courtyard Priority Project include the inscribing of the names of all the University Presidents into stylized sitting walls, reinforcing the name of the space. Also included in the plan are larger-than-life-sized letters spelling "TENNESSEE" as an animating feature for this centerpiece of the*

An appropriately-sized paved area with adjacent open lawn at Clement Hall

An uncomfortably large plaza at McClung Hall

freshman residential life program. See the plan for this priority project in APPENDIX B. The lawn adjacent to the entry paving at Clement Hall can accommodate infrequent larger gatherings. The empty sea of pavement surrounding McClung Tower lends a forlorn look to this area of campus.

- Create spaces for large campus-wide gatherings. While paved gathering spaces should be sized to accommodate the number of anticipated daily users, the needs of infrequent larger functions can be accommodated through the provision of a flat or very gently sloping lawn area adjacent to a paved gathering space. Where possible and programmatically appropriate, the erection of a tent can be accommodated by keeping a portion of the lawn open and free of trees. Design the spaces simply to accommodate maximum flexibility.

Create successful campus spaces

- Enrich and enliven both interior and exterior spaces by locating these in proximity to each other, and, where possible, connect indoor and outdoor spaces with doorways and extensive glazing. Where topography requires an exterior space to span several different levels, ensure that each level is of adequate size to be comfortable for gathering, and that the lowest level of the space is activated by a building entry and glazing so that it is not a dead-end space. *The most heavily-used area of the Presidential Courtyard is the space outside the two Carrick Hall lobbies where the interior and exterior spaces are linked by entries and extensive glazing. This area is designed to be the focal area in the improvement proposed for the Presidential Courtyard Priority Project. See the plan for this priority project in APPENDIX B.*

- Locate spaces where they will be enlivened by pedestrian movement through or adjacent to the space. In general, associate gathering areas with building entries and pedestrian ways rather than as separate spaces in the landscape. The gathering area located at a building entry already has many of the ingredients for a successful gathering space—a reason for existing, a flow of traffic to the area, enclosure (on at least on one side), and possibly the suggestion of a ceiling (building entry canopy). The gathering space located in a spot unrelated to a building entry or architecture, must recreate these elements, and in doing so may introduce uncharacteristic, high-maintenance elements into the landscape where trees, lawn, and walkways are more appropriate.

- Employ trees to help shape campus spaces by their suggestion of a "ceiling" for the space. Preserve existing trees, recognizing the immediacy of their space-shaping abilities. Where existing trees are lacking, plant new trees, ensuring that the ceiling, or ultimate canopy height of the selected species, is appropriate to the scale of the space – use smaller flowering trees for smaller spaces and larger trees with high canopies for larger spaces. Follow Crime Prevention Through Environmental Design (CPTED) guidelines to ensure that the space is not subdivided inappropriately or that visual connections are not interrupted by the addition of low-branching trees or tall shrub masses, creating safety concerns. *Existing mature campus heritage trees provide the setting for tables and chairs in the improvements proposed for the Presidential Courtyard Priority Project. The trees create a space that is comfortable and conducive to long-term use without obscuring any sight lines. See the plan for this priority project in APPENDIX B.*

- Maximize the use of campus spaces throughout the academic year by providing opportunities for sun and shade; employ deciduous tree planting or overhead structures to provide shade in sun-filled spaces.

- Select a sitting surface that matches the probable length of use. For areas where students could feel comfortable sitting and studying for a length of time, benches with backs and tables and chairs are appropriate. For areas outside a building entry, where the use would be related to the waiting or meeting of a fellow student, a backless bench is appropriate. *The small quad at Clement Hall is inviting for studying and longer use – benches with backs are appropriate for this space. The HPER plaza does not invite long-term use – seating here would best be accommodated by backless benches or low sitting walls.*

- Select a sitting surface that matches the character and the size of the space. For areas like the Ayres Hall South Lawn, with its spacious lawn and park-like setting, a bench with a back is easily absorbed by the space, while a backless bench may be needed to keep small gathering areas simple and uncluttered. *The South Lawn at Ayres Hall provides a wonderful setting for benches with backs, although those with their backs to the parking lack sufficient enclosure behind them to afford comfort to the user.*

- Increase the flexibility of campus spaces by providing additional seating through the addition of low site walls. Accommodate grade change within a space through the incorporation of low retaining walls, limiting their height to less than 30" where possible to avoid subdivision of the space and to provide for the safety of users on the upper level without compromising seating accommodation on the lower level. Ensure that an accessible route is provided between all levels. *See 2.14 SITE AND RETAINING WALLS in the SITE STANDARDS.*

- Ensure that campus spaces have adequate lighting either from the adjacent buildings or the campus standard pedestrian pole fixture; reserve the use of the campus bollard for unique situations where the campus pedestrian fixture is not appropriate, recognizing that their tighter spacing can create a littered look in the landscape. *See Section 3 SITE LIGHTING in the SITE STANDARDS.*

- Provide bike racks near building entries, in long lines or curves that help define pedestrian circulation. *Bicycle parking is organized with broad strokes of bike racks flanking walkways in the improvement proposed for the Perkins-Ferris Quad and Presidential Courtyard Priority Projects. See the plans for these two priority projects in APPENDIX B. See 2.4 BIKE RACKS in the SITE STANDARDS.*

- Provide paired litter and recycling receptacles to reflect a balance of users' needs and maintenance access and capabilities. Locate receptacles at some distance from seating, so that any associated smells do not compromise the seating. *See 2.6 LITTER AND RECYCLING RECEPTACLES in the SITE STANDARDS.*

Bench with back, for long-term use appropriately located at Clement Hall

Bench with back inappropriately located at an uninviting HPER plaza

Appropriately-sited benches on the Ayres Hall South Lawn

Less comfortably-located benches on the Ayres Hall South Lawn

GUIDELINES FOR PRINCIPLE THREE: CAMPUS CONNECTIONS

Optimize campus pedestrian connections above all others. *Campus landscapes are, above all, places for people; in order for the campus to be perceived as a cohesive, welcoming, and attractive space befitting a Top 25 Public Research University, its pedestrian connections must be positive ones, its vehicular connections downplayed, and alternative transportation promoted.*

Universities and colleges across the country are taking steps to reclaim their campuses for their community by removing vehicles from the heart of their campuses. As has been done with the Joe Johnson and John Ward Pedestrian Mall, roadways are being replaced with walkways, and spaces for parking are being consolidated within parking garages at the edges of campus. This is not an easy step for campuses to take; while the benefits are immeasurable, the loss of a parking spot outside one's door is a change that many on campuses do not want to make. The enhancement of alternative transportation options is critical to making this change – the enhancement of bus routes and bus stops and the provision of bike lanes, bike parking, and bike sharing systems are important steps that need to be taken to support the transition from a vehicle-centric campus to a people-centric campus. Enhancing the physical aspects of pedestrian connections – locating walkways to accommodate desired routes, providing shade and proper lighting, designing steps as campus events, and providing gathering spaces along the way – is not only essential to effecting the change to a pedestrian-friendly campus, but is also critical to enhancing the academic and social connections at UTK. The University should investigate the opportunities to create overlay and maintenance districts for campus streets. This will allow flexibility with standards used within the public right-of-way. Coordination will be required with the appropriate organizations and agencies will be vital to the success endeavor.

The following design guidelines outline the steps to be taken to develop a campus that supports its community's physical, social, and intellectual connections.

Proposed walkways for Presidential Courtyard

Chaotic walkways at Presidential Courtyard

Reinforce campus pedestrian connections

- Provide attractive and inviting pedestrian ways between buildings and through spaces that contribute to a comprehensive system of walkways for the campus, recognizing the role of walkways in orchestrating the views and impressions of visitors and in influencing the comfort of its community members.

- Locate walkways to reflect the pedestrian desire lines between building entries and destinations. Where a space would become too dissected by the meeting of each of the desire lines, encourage pedestrians to take a slightly less direct route through the placement of low walls, curbing, low planting, or trees. *The current Presidential Courtyard responds to the numerous desire lines through the space, but the result is chaotic in appearance. The improvements proposed for the Presidential Courtyard Priority Project consolidate some of the walkways to organize the space,*

utilizing low walls surrounding planting beds to direct students through the space while also providing additional informal seating as well. See the plan for this priority project in APPENDIX B.

- Locate connecting walkways where they will not pass too closely to non-contributing building faces (ones whose interior uses do not relate to outdoor spaces) unless an overhead canopy is provided. Too little distance between a walkway and a non-contributing building face undermines the integrity of the building and renders the walkway uncomfortable. The comfortable distance increases with the height of the building. *The walkway at the southwestern corner of Strong Hall would feel uncomfortable and diminish the building were it not for the overhead canopy of the adjacent mature ginkgo tree. The lack of an overhead canopy, either man-made or leafy, renders the walkway at the entry to the Hess Hall courtyard uncomfortable and detracts from the building's appearance.*

- Accommodate grade change in walkways via sloping walkways with a maximum 5% slope rather than via 8% ramps for the simplicity that walkways bring to the landscape. For steeply sloping sites that cannot be traversed by a 5% maximum slope, look to adjacent building interiors – direct corridors and elevators – to provide accessible routes through the area that will be attractive to the entire community. *The Haslam Business Building provides a clear route through the building that renders the site accessible to all. The ramp on the south side of the Sciences and Engineering Building clutters the landscape when a simple walkway could be provided to the west of the entry.*

- Design steps to be more than a utilitarian navigation of a slope; design them to make their navigation an event within the campus. Design step widths to accommodate anticipated pedestrian traffic, widening them further as necessary to help minimize the perceived length of long runs. Where steps are adjacent to a building entry or a gathering space, widen steps to accommodate gathering and sitting. Locate steps to ensure that the focused views at the top and bottom of the steps are positive and merit the focus given to them. *The steps near Gate 21 at Neyland Stadium flank an amphitheater, providing the navigators of the steps with interesting views and opportunities to meet friends. Many steps on the Hill render the navigation of the slope a chore at best, and sometimes a challenge.*

- Provide opportunities for informal gathering at the edges of campus walkways through the addition of low site walls for seating; site walls are less prescriptive for their use and are more easily integrated into sloping landscapes than benches. *See 2.14 SITE AND RETAINING WALLS in the SITE STANDARDS.*

- Limit the paving palette to concrete walkways so that the value of this palette is not devalued by the frequent introduction of special paving. Provide an adequate pavement width to avoid worn lawn areas at the edge of the walkway due either to pedestrian traffic volumes or service vehicle use. *See 1.1 CONCRETE in the SITE STANDARDS for the material and detailing of campus walkways.*

- Locate light fixtures to provide an adequate and consistent lighting level

A walkway at Strong Hall rendered comfortable by a canopy tree

The close proximity of walkway and building at Hess Hall detracts from them both

The Haslam Building's lower plaza is accessible through the building

A non-integrated ramp at the Science & Engineering Building

An eventful navigation of the slope at Neyland Stadium

A utilitarian navigation of the slope to Cumberland Avenue

across the campus that adheres to the light level recommended for campuses. *See Section 3 SITE LIGHTING in the SITE STANDARDS.*

Minimize the impact of vehicles on campus – design streetscapes and vehicular zones for pedestrian comfort

- Continue the construction of campus parking garages to eliminate parking from the heart of campus, returning the campus landscape to pedestrians. Ensure that the pedestrian connections between campus destinations and the garages are positive, comfortable, safe, and inviting.
- Provide minimal surface parking spaces for new projects, possibly only handicapped parking and short-term service parking. All other parking should be provided underground or off-site in parking garages. Ensure that the pedestrian connections between the building and the garages are positive and inviting.
- Locate the required number of accessible parking spaces for each project where they will provide a simple accessible route to the building without compromising the building's gathering spaces with the introduction of a vehicular scale and without encouraging the use of the vehicular zone by able-bodied persons.
- Minimize the visual impact of surface parking areas on the campus through careful grading, layout, planting, and lighting. *See TYPICAL SPACES/ SURFACE PARKING for more guidelines regarding the design of surface parking areas.*
- Design large parking areas for pedestrian safety – organize rows so that the primary pedestrian traffic moves down the aisles rather across the aisles. Ensure that pedestrian traffic through the lot is properly illuminated for safety, but remains in keeping with adjacent pedestrian areas to not create blind spots due to the contrast in light levels.
- Provide access to service areas, where possible, by paved routes that are first and foremost pedestrian ways. Clarify the distinction between roadway and serviceway – paved ways that are only intended for use by service vehicles and pedestrians should be separated from the roadways by a mountable curb or a driveway apron and distinguished by the addition of concrete pavers at the edge of the serviceway. *See 1.4 CONCRETE PAVERS in the SITE STANDARDS.*
- Accommodate routes for the semi-annual events of move-in/move-out days for residential buildings in a manner that does not compromise connections on the site for the remaining 363 days of the year.
- Reduce roadway width on campus roads where possible, recognizing that fast-moving traffic is antithetical to campus life.
- Investigate the opportunities to create overlay and maintenance districts for campus streets to allow flexibility with City standards for the public right-of-way. Coordination with the appropriate organizations and agencies will be vital to the success of this effort.

- Transform roadways where possible to pedestrian serviceways. Communicate the restricted use with a reduced road width that is further visually minimized with the addition of a wide band of standard concrete pavers at each edge at the bottom of the curb. *See 1.4 CONCRETE PAVERS in the SITE STANDARDS.*

- Remove roadways where traffic can be safely rerouted and transform the former roadbed to a pedestrian mall or great lawn. *The Pedestrian Mall interconnects the campus while Volunteer Blvd. bisects the campus.*

- Provide attractive and inviting pedestrian ways adjacent to vehicular ways to ensure that the corridor is as successful for pedestrian connections as vehicular ones. *The improvements proposed for the Volunteer Blvd Priority Project call for the reduction of parking and travel lanes in keeping with the 2011 Master Plan; however, the approach is slightly different. Rather than utilizing one half of the roadway for bikes and pedestrians and the other half for vehicles, the improvements proposed by the priority plan call for the replacement of parallel parking with planting strips so that the walkways along the street can be enhanced for pedestrians on both sides of the street. See the plan for this priority project in APPENDIX B.*

- Provide for pedestrian safety at crosswalks by employing visually prominent crosswalks at all vehicular intersections and other locations where a pedestrian way crosses a vehicular way. Utilize raised intersections where appropriate to reinforce the identity of the area as a pedestrian zone. *See 1.10 CROSSWALKS in the SITE STANDARDS.*

The Pedestrian Mall reclaims the heart of the campus for pedestrians

Volunteer Boulevard cuts a vehicular swath through the campus

Enhance alternative transportation on campus

- Accommodate the needs of bus stop users – provide shade, ample space adjacent to the sidewalk for waiting, seating within the shelter, as well as additional flexible seating outside the shelter via low site walls. Provide space within the shelter to accommodate passengers in wheel chairs.

- Accommodate bikes in well-marked separate lanes to the right of vehicular travel lanes, preferably at curbside rather than beside parallel parked cars. *The improvements proposed for the Volunteer Blvd Priority Project call for the provision of bike lanes in keeping with the 2011 Master Plan; however, the approach is slightly different. Rather than utilizing one half of the roadway for bikes and pedestrians and the other half for vehicles, the improvements proposed by the priority plan call for the creation of bike lanes along the curb when the second travel lanes are removed, so that the bike lanes more easily integrate with intersecting streets along the length of Volunteer Blvd. See the plan for this priority project in APPENDIX B.*

- Provide bike parking near building entrances where it can be accessed by walks without steps, without detracting from the building entrance. Organize bike racks in linear arrangements, either straight or curved, on pavement at the edges of walkways to minimize their visual prominence. Where possible, locate racks under a building overhang to provide protection from the weather.

- Expand the bike share program on campus.

A linear arrangement of bike racks at a walkway edge at South College

A chaotic assemblage of bikes at a traditional rack in the lawn at the Science and Engineering Building

GUIDELINES FOR PRINCIPLE FOUR: CAMPUS PLANTING

Enhance all campus spaces and connections with healthy, well-sited, and well-maintained plantings and turf. *Campus plantings play a critical supporting role in shaping successful campus spaces and connections; the performance and maintenance level of those plantings and lawns are essential to providing the UTK campus with a high-quality image that is reflective of its Eastern Tennessee setting and its land grant heritage.*

The role of plantings on the campus is that of a supporting one – helping to shape and define campus spaces, assisting in navigating the campus by enhancing but not competing with building entries, enhancing campus perceptions by directing and screening views, and providing for the comfort, both physical and psychological, of the UTK community. Despite its supporting role, it is the quality of the landscape – the health and the maintenance level of campus lawns, trees, and smaller plantings – that engender positive or negative impressions of a campus. In its quest to become a Top 25 Public Research University, UTK's landscape must convey an image of excellence as a manifestation of UTK's excellence as a research university.

The following design guidelines are provided to help guide the addition of plants to the campus landscape in a manner that contributes to the shaping of a positive landscape rather than just decorating it and that does not unnecessarily increase the maintenance burden for the University.

Create a cohesive and coherent landscape that reflects the heritage and setting of the UTK campus

The Moss Teaching Garden at the Science and Engineering Building

A missed opportunity at the Walker Life Sciences Building

- Reflect UTK's heritage as a land grant institution by creating a campus that is a manifestation of its original mission to teach agriculture, science and engineering. Seek opportunities to use the campus as a laboratory, a learning landscape, and a promoter of cutting edge technologies in the realms of horticulture and natural resource stewardship. Protect and preserve existing trees in keeping with natural resource stewardship practices. For new plantings, select plant species that promote biodiversity and sustainable practices and that support the school's academic mission, and employ them in a manner that enhances the performance of the campus landscape. *The Moss Garden occupies a hidden corner outside the Science and Engineering Bldg, seizing the opportunity to teach the UT community about Bryophytes. The area outside the Walker Life Sciences Bldg represents a missed opportunity to include teaching gardens and does not offer any indication that the Biology Dept. is housed within.*

- Reflect UTK's eastern Tennessee setting by selecting plants that are native to the region, promoting a familiarity with the natural ecosystem within the University community and helping to enhance biodiversity and the ecological health of natural systems.

- Create a coherent landscape by considering the scale of a space when selecting a plant palette. The size of a space is inversely related to the

appropriate level of complexity for the planting – the largest spaces benefit from the simplest planting so that the entire space can be viewed without the distraction of numerous species. With the creation of many juxtapositions of contrasting plantings, the sense of a space falls victim to the attention given to the particulars.

- Consider the speed at which a particular landscape is viewed when selecting a plant palette. Campus areas that are primarily viewed from a car – places where walkways don't exist or are rarely used – should be planted with expansive sweeps of the same plant, as increased complexity cannot be comprehended or appreciated and can undermine the legibility of the landscape.

- Select and locate plantings to support the navigation of campus and to lend a clarity and comfortable rationality to the campus. Building entrances should be a primary focus of campus spaces; therefore, design plantings at entry spaces to support but not compete with the architectural definition of a building's entry. *See CAMPUS SPACES.*

A space-defining and place-making large deciduous canopy tree on the Ayres Hall South Lawn

Circle Park, UTK's major great lawn, is subdivided by low-branching flowering trees

Shape campus spaces with plantings

- Protect and preserve existing mature heritage trees recognizing their value in creating memorable campus spaces.

- For new plantings, employ large deciduous canopy trees to shape and shade campus spaces, given their ability to provide both edges and ceilings for "outdoor rooms" while maintaining an openness at eye level. Large deciduous trees, with their high branching, are necessary to complete the creation of a volume of space that is begun by the building edges. This third dimension, or "ceiling," is important to making successful campus spaces. *The improvements proposed for the Pedestrian Mall Extension - West Priority Project include large deciduous canopy trees at the edges of the mall to help define the space with edges and a ceiling. Smaller flowering trees are used at the intersection with Melrose Place, where a filtering of the views up the street and down to the adjacent parking area will benefit the pedestrian mall. See the plan for this priority project in APPENDIX B. See 5.1 TREES in the SITE STANDARDS.*

- Use large evergreen coniferous trees to create an edge for a space; to visually screen an area year-round; to provide protection from winds; and for the winter interest that they provide. Given that they are less successful at creating a "ceiling" for a space, their use in all but the largest campus spaces is not recommended. It should be noted that young evergreen coniferous trees and those mature species that do not self-prune are "space-breaking" rather than "space-making" elements within campus spaces. *See 5.1 TREES in the SITE STANDARDS.*

- Use smaller flowering trees selectively within campus spaces. While they are a welcome sight in the spring, they are much less successful in defining and shading campus spaces given their size – smaller flowering trees often interrupt sight lines, and are usually not of sufficient size to provide an edge or roof to any but the smallest of spaces. The result is that they fill, rather than create, a space. Consider flowering time when choosing a flowering tree for the campus, favoring some tree species that flower at the time of important events in the University's calendar. *The space-making abilities of*

Low plantings at Morgan Hall in keeping with CPTED guidelines

Tall shrubs at Presidential Courtyard subdivide the space and limit visibility

Ayres Hall as a model for a high-quality campus landscape

Non-irrigated medians with unamended soils present a difficult environment for a high-quality landscape

a deciduous canopy tree for large spaces is easily contrasted with that of a flowering tree by comparing trees at Ayres Hall South Lawn versus Circle Park. See 5.1 TREES in the SITE STANDARDS.

- Select species with their ultimate height in mind so that pruning is not necessary; pruned shrubs representing an unnecessary maintenance burden for Facilities Services as well as resulting in an architectural appearance where a natural simple shrub mass would be a better addition to the campus landscape.

- Use large shrubs judiciously within campus spaces, due to their space-breaking quality, the higher amounts of maintenance that they require, and the safety issues that they can create. Ensure that all plantings are in keeping with CPTED design guidelines. *Low planting shape the spaces outside Morgan Hall while maintaining sight lines in keeping with CPTED guidelines. Tall shrubs unnecessarily subdivide the space in the Presidential Courtyard.*

- Use foundation plantings judiciously; for many buildings, the overuse of foundation plantings can unnecessarily complicate the campus space formed by the building. Where foundation plantings are desirable, a simple palette of massed species should be employed. The use of singular vertical plants should be avoided. *See 5.2 SHRUBS and GROUNDCOVERS in the SITE STANDARDS.*

Create high quality and high performance landscapes

- Protect and preserve existing mature heritage trees, recognizing their ability to create memorable landscapes with their structure and shade and the time required to replace them.

- Support environmentally-sensitive practices with the selection and placement of plants. Deciduous canopy trees' natural support of sustainable solar energy practices renders them the optimum choice for southern-facing building facades and outdoor spaces. Evergreen trees are valuable for their effectiveness in screening winter winds; however, their screening of winter sun renders them a poor choice for the south side of a building.

- Enhance the quality of the UTK landscape by minimizing the visual impact of unattractive, yet necessary elements such as utility structures, service areas, and trash collection areas. Employ the simple technique of shading unattractive features to ensure the sunlight doesn't spotlight them. When using plantings to screen such elements, ensure that the plantings do not call increased attention to the area to be screened through rigid spacing of atypical species for the landscape. If the element to be screened is situated where the planting of a generous shrub mass can rationally extend beyond the unsightly structure, then the addition of an informal shrub mass can be used successfully. If, however, the structure is located in an area that does not lend itself to a shrub mass, the structure should be downplayed through the use of the campus standard screen fence and through the alignment of circulation to ensure that the structure is not featured in any directed views. Architectural structures such as masonry walls should be considered as an alternate to planting and screen fencing where the structure to be screened abuts a masonry building face. *See 2.15 SCREEN*

WALLS, 2.16 PRE-FABRICATED SCREENS, and 2.17 ENCLOSURE GATES in the SITE STANDARDS.

- Soften the visual impact of surface parking lots with a planting of low shrubs and an informal planting of evergreen and deciduous trees possibly combined with grading. Do not attempt to screen views of parking areas with a rigid line of vertical evergreens. *The improvements proposed for the Pedestrian Mall Extension - West Priority Project minimize the views of the adjacent parking area through regrading to create a berm that is then planted with an informal shrub mass of one or two shrub species to provide a simple background planting. See the plan for this priority project in APPENDIX B.*

- Consider the maintenance implications of all proposed designs for the campus landscape, recognizing that an increase in the maintenance requirements for a new project is not sustainable and reduces the likelihood that the project can be well maintained, and that a well-maintained campus is essential to achieving a high-quality landscape for the campus.

- Minimize the negative impact of lawns on the environment and their maintenance requirements by employing new developments in Integrated Pest Management.

- Question the use of lawn areas as a campus default. While today the presence of a well-maintained lawn is critical for establishing the value of campus spaces, the maintenance of lawns presents a challenge to sustainable landscape practices. Consider the planting of masses of low shrubs in lieu of lawns. Also consider reflecting the original campus landscape - replanting areas that are not central to the life or image of the University community, but which need to be kept open, with a meadow of native orange and white flowers and grass species that maintain a lower height with only semi-annual mowing. As the community becomes more comfortable with the image created by open areas of longer grass, it is proposed that this treatment be extended to ultimately include open areas not used for athletics and active and passive recreation, with the possible eventual use of this palette as an image-making treatment for the campus. *See 5.4 NATIVE GRASSES AND FLOWERS in the SITE STANDARDS.*

- Use flower beds of seasonal color judiciously on campus for the higher levels of maintenance that they can require. Locate beds only in selected small gathering areas that are intimate in character, at selected building entries, or in areas of high significance or visibility, such as campus gateways. Given the location of campus gateways in primarily vehicular zones, select a single species of flower to plant at the gateways. Consider carefully the potential maintenance burden of, and alternatives to, planting flowers in planters prior to incorporating them into the campus landscape. *Seasonal color is added to the entry of historic Morgan Hall through the addition of a single flowering plant. Planters help soften the oppressiveness of McClung plaza but require hours of hand watering. See 5.5 SEASONAL COLOR BEDS in the SITE STANDARDS.*

Seasonal color at Morgan Hall

Planters at McClung Plaza are a maintenance burden

- Establish a protocol for memorial plantings to ensure that the plantings contribute to the creation of a comprehensive rather than a disjointed and less maintainable campus landscape. Identify tree locations and species that conform to a preexisting planting plan for the campus as options for memorial plantings. Establish a standard for the size of memorial gifts of plantings to ensure that the gift is adequate to cover the cost of the selection, purchase, installation, memorialization, and long-term maintenance of the memorial plantings. Establish a policy regarding the removal and replacement of memorial trees. Create a system of attribution in lieu of plaques at the base of plantings, such as a book or a centrally and prominently located dedication board that can serve to commemorate all of the gifts to the University landscape.

GUIDELINES FOR PRINCIPLE FIVE: SUSTAINABILITY

Augment the integrity and performance of the campus landscape by employing sustainable practices. *Authentic participation in higher education programs to advance environmental responsibility must guide all campus development.*

As a member of the Association for the Advancement of Sustainability in Higher Education, the University of Tennessee, Knoxville has initiated the *Make Orange Green* campaign that includes a Climate Action Plan, energy conservation, numerous recycling efforts, and Green Dining. In recent years, UTK has made significant investments in a sustainable future with the creation of new departments and implementation of plans and policies. The mission statement of the University of Tennessee System makes specific mention that "The UT System's delivery of education, discovery, outreach and public service contributes to the economic, social and environmental well-being of all Tennesseans." This commitment to sustainable practices – those that are environmentally sensitive, economically feasible and supportive of social equity – is reflective of the University's founding mission as a land grant institution and appropriate to an aspiring Top 25 Public Research University. To meet this goal, further sustainable practices should be incorporated into the life of the University that are reflective of an institution that is engaged in cutting-edge technology and research.

The following guidelines help to define the efforts that should be implemented on the campus by the Facilities Department and in new construction projects, and in an effort to encourage sustainable practices by the entire UTK community.

Implement sustainable landscape principles and practices

- Consider the Sustainable Site Initiative™ as a resource for all site planning and design on campus.
- Minimize the extent of pavement, reducing urban heat island impacts as well as increasing the opportunity for groundwater recharge. Place pavement with a purpose and consider alternatives to pavement such as stabilized turf where constant use is unlikely.
- Utilize pervious pavements where possible to minimize non-point source pollution of local waterways, while also increasing groundwater recharge and reducing stress on stormwater infrastructure. *See 1.2 PERVIOUS CONCRETE in the SITE STANDARDS.*
- Employ best management practices for stormwater management, promoting the campus as a leader in environmental stewardship, as befits a land grant institution. Use sustainable strategies, such as bioswales and rain gardens, to increase the quality and decrease the quantity of runoff. Consider these strategies to filter pollutants that accumulate between rainfalls and encourage on-site infiltration, while also providing carbon sinks with the vegetation, improving air quality and providing biodiversity on the campus. *Permeable pavers and structural cells have been used at Neyland Stadium's Gate 21 to permit infiltration and improve growing conditions for the trees in the plaza. Proposed stormwater management at the Blueberry*

Subsurface stormwater management at Gate 21

Falls Priority Project creates an opportunity to create an "Upper Falls" and "Lower Falls."

- Promote stormwater harvesting practices to reduce the demands on water systems for irrigation, capturing the water in surface basins or underground storage tanks, and at the same time reducing runoff and increasing on-site infiltration.
- Promote the harvesting of cooling condensate for use in irrigation, reducing the unnecessary use of potable water for the task.
- Design and size irrigation systems to achieve maximum efficiency and reduce water consumption. Incorporate smart controls, weather monitors and soil moisture sensors into irrigation systems to enhance their efficiency. Utilize centralized control to reduce maintenance and increase flexibility in the system. *See 6.2 IRRIGATION in the SITE STANDARDS.*
- Incorporate green roofs in new building and building renovation projects where possible to realize the benefits of stormwater management, water and air quality improvements, heating and cooling cost reduction, urban heat island effects reduction, and biodiversity and habitat enhancement. Favor the planting of appropriate native species over standard non-native greenroof species.
- Protect steep slopes and erosion-prone areas by maintaining an adequate vegetation cover at all times.
- Protect the campus tree collection, recognizing the value of the trees for providing shade, sequestering carbon, reducing stormwater runoff and stabilizing soils. Preserve mature trees within building project and utility improvement sites, recognizing the decades required to replace a mature tree. *The improvements proposed for the Perkins-Ferris Quad Priority Project have been based on the preservation of the existing heritage trees in the space. See the plan for this priority project in APPENDIX B.*
- Preserve and protect existing campus street trees during utility projects, in recognition of their significant contribution to the campus character.
- Increase the University's tree collection and expand the campus tree canopy. Develop a succession plan for older trees that may be in decline, planting replacement trees years prior to the required removal of existing mature trees. Avoid planting large swaths of the same tree species to reduce risk of mass loss from disease or insect damage.
- Locate new deciduous trees on the south sides of buildings to reduce the heating and cooling demands of the building.
- Strive for zero waste landscape maintenance practices – composting wood waste from the removal and pruning of woody plants.
- Maximize the planting of native species that are adapted to the campus landscape due to their general ability to survive long periods of drought as well as significant rainfall better than non-native species. Plant native species to help keep the local ecosystem in balance through their support of indigenous, co-evolved insect populations, which support local bird populations, which in turn help to keep foreign insect infestations at bay.

Meadows offer a more sustainable alternative to lawns

Kudzu, a widely recognized invasive species throughout the Southeast

- Consider reflecting the original campus landscape - replanting areas that are not central to the life or image of the University community, but which need to be kept open, with a meadow of native orange and white flowers and grass species that maintain a lower height with only semi-annual mowing. As the community becomes more comfortable with the image created by open areas of longer grass, it is proposed that this treatment be extended to ultimately include open areas not used for athletics and active and passive recreation, with possible eventual use as an image-making treatment for the campus. *See 5.4 NATIVE GRASSES AND FLOWERS in the SITE STANDARDS.*

- Prioritize the removal of documented invasive plant species to prevent them from overwhelming the native plant communities and threatening local insect and bird populations that depend on the native species. Consult the following resources on Tennessee's invasive plants: The Oak Ridge National Education Research Park website - http://www.esd.ornl.gov/facilities/nerp/invasive_species.html, and the Tennessee Exotic Pest Council website - http://www.tneppc.org.

- Employ Integrated Pest Management (IPM) practices for pest management in the landscape to reduce reliance on chemical controls.

- Minimize dependence on polluting chemical fertilizers. Utilize organic practices wherever feasible.

Support sustainable practices for construction and maintenance

- Site and design new buildings and building additions to minimize energy employing proper solar orientation to minimize the need for mechanical heating/cooling systems and reduce operating costs.

- Create and implement a stormwater management plan for construction projects. Employ practices to reduce erosion and sediment load from construction activities, such as silt fencing/mulch dams or logs, sediment traps, vegetated buffer strips, etc.

- Strip and stockpile topsoil at the beginning of construction, amend as necessary, and reapply. Cover and stabilize stockpiled topsoil and store away from natural drainage paths.

- Protect soil in unstripped lawn areas from compaction during construction by the addition of layers to distribute construction vehicular loading or the protection of these areas with fencing.

- Minimize the area of bare soil exposed at one time by implementing phased grading.

- Protect mature heritage trees during construction and clear only areas essential for construction, physically marking the limits of disturbance, particularly in vegetated areas and slopes.

- Protect the trunks of existing trees during construction, and prevent the compaction of soil within the tree's dripline due to equipment or material storage.

Encourage and support sustainable practices by the UTK community and identify sustainable elements as they are incorporated into the campus

- Support and promote recycling efforts by the University community members throughout the campus landscape by pairing litter and recycling containers.
- Promote alternative transportation systems to minimize the use of automobiles on campus thereby facilitating the reduction in road widths and parking within the campus core. Enhance bus routes and bus stops and promote bicycle ridership through the creation of bike lanes, the provision of convenient and safe bike parking, and the expansion of the campus's bike share program.
- Wean the University community from automobile dependence by relocating parking spaces from the core of the campus to peripheral parking garages, rendering the use of automobiles less convenient than alternative transportation and walking.
- Support the University's participation in emerging trends and new environmentally-responsible technologies through the integration of electric bike sharing and electric car charging stations into the campus landscape. *See 2.25 ELECTRIC VEHICLE CHARGING STATION and 2.26 BIKE SHARE STATION in the SITE STANDARDS.*
- Showcase and educate the campus community about sustainable landscape practices in place at the University. Coordinate with the University's signage program to develop markers that educate and contribute to the University's brand without introducing visual clutter. *The large plaza at Neyland Stadium's Gate 21 belies the sustainable efforts taken below the surface and out of sight of the observer. A system of markers can make these and other sustainable practices on campus more visible.*

Bike lane marking on Andy Holt Avenue

Subsurface sustainable practices at Gate 21 are out of sight and generally unknown

GUIDELINES FOR TYPICAL CAMPUS SPACES

EDGES AND BOUNDARIES

Existing attractive access to Second Creek from Estabrook Road

Existing unattractive campus edge along Estabrook Road

The edges of the UTK campus are marked by natural features, industrial uses, major transportation routes, and urban neighborhoods. For this reason, no one structured treatment of the campus edge is appropriate. Instead, both the campus and Knoxville will benefit from the University's consistent application of its standards for site furnishings - especially lighting, banners and signage - and from a high level of maintenance by the University to ensure that all edges are marked by a high-quality landscape. *See Figure 3 below and in APPENDIX B for documentation of the major campus boundaries.*

- Mark the campus edges in a manner that is appropriate to the context; no single approach is appropriate to all edges.
- Create an edge for the campus that is permeable, neighborly, and welcoming in character – avoid the use of a campus fence.
- Ensure that the landscape at all campus edges is a high-quality, well-maintained, healthy landscape that contributes to the character of Knoxville and the University. *The removal of invasive vegetation along the bank of Second Creek would improve the environmental quality of the creek and render the area as an asset to the University and the City. Creation of a more attractive edge along Estabrook Road and an additional entry point to Second Creek would enhance the area further.*
- Consider collaboration with the City to enhance the river's edge opposite the campus along Neyland Drive. Remove invasive vegetation to improve the environmental quality of the riverbank.
- Minimize or reduce the impact of elements that do not contribute or detract from the campus image at its edges.
- Employ the site standards for lighting and signage at all edges.
- Punctuate edges at key points with the standard campus gateway.

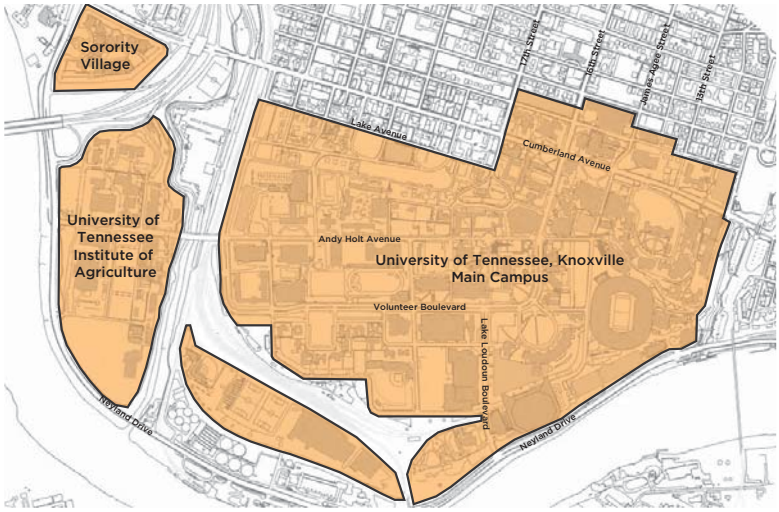

Figure 3: Campus Boundaries

GATEWAYS AND ENTRANCES

The 2001 Master Plan identified key locations at the edge of the campus that needed to be identified as campus gateways. *See 4.1 CAMPUS GATEWAYS in the SITE STANDARDS.* All of these locations have now been marked as primary or secondary campus gateways; however, with subsequent development, an additional location has been identified at the intersection of Phillip Fulmer Way and Cumberland Avenue. Ensure that each of the gateways achieve the maximum impact for the campus by carefully reviewing each gateway site for a consistent, simple, high-quality landscape and a non-competing, quality setting. This document also addresses other minor campus portals by proposing the location of tertiary gateways to be marked by single brick columns. *See 4.2 MINOR SITE COLUMNS in the SITE STANDARDS. See Figure 4 below and in APPENDIX A for a plan of existing and proposed campus gateways.*

- Mark all primary and secondary gateways with the standard campus gateway wall, modifying the design to suit the setting for the wall – as a single wall that is centered or to the side vs. double flanking walls, as concave vs. convex walls, and as longer or shorter gateway walls.
- Set all campus entry gateways within a high-quality, simple landscape that contributes to, but doesn't compete with, the gateway.
- Set all the gateways within an adequately-sized space to ensure that the gateway can receive an appropriate landscape treatment. *The gateway at The Hill lacks adequate space for an appropriate landscape treatment; narrowing Circle Drive would provide the needed room. The siting for the Ag campus gateway is ample and results in an impressive campus gateway.*
- Ensure that all gateways are set within an appropriate space. Consider coordination to improve adjacent elements even if they fall beyond the campus boundary. *The railroad bridge serves as a portal, in conjunction with the campus gateway and the Min Kao Building, creating a memorable initial view of the campus when approached from the east. However, the disrepair of the underside of the bridge detracts from this dramatic approach.*

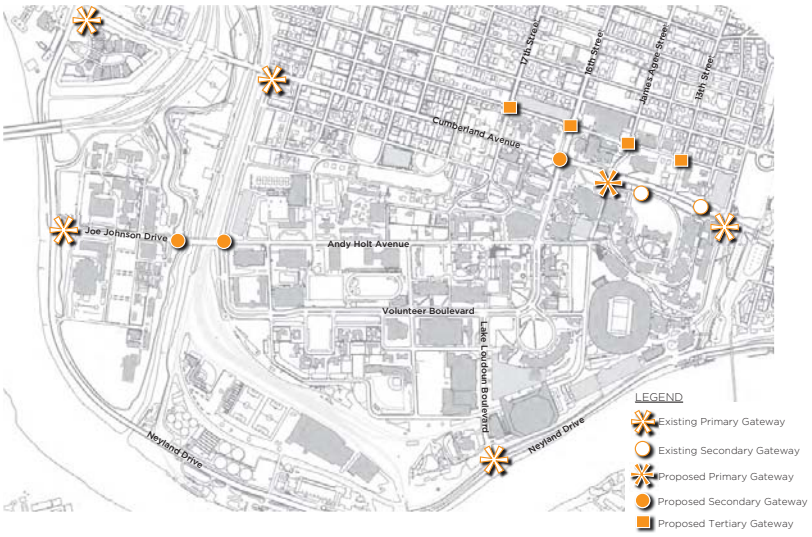

Figure 4: Campus Gateways

An inadequate setting for the secondary campus gateway at The Hill

An appropriate setting for the campus gateway at the Agriculture Campus

The gateway at the Min Kao Building makes a dramatic entrance

The disrepair of the railroad bridge on Cumberland Ave compromises this entry to the campus

PLAZAS

Plazas are needed on university campuses where large portions of the community come together with enough frequency to exert too much pressure for all but a paved space. Plazas may be large, such as at Neyland Stadium's Gate 21, or small, as at the entry to the Haslam Business Bldg. They may comprise the entire space such as at the lower level of the Haslam Bldg or they may be part of a large quad such as in the proposed improvement for the Presidential Courtyard and Perkins-Ferris Quad Priority Projects. *See the plans for these two priority project in APPENDIX B.* It is critical that plazas be designed for flexible use and with pavement minimized, recognizing that large, paved spaces remain empty for the majority of the time even at a large university, and can lend a forlorn look to the campus.

- Design plazas to contribute to a network of campus spaces by employing the campus site standards to achieve a consistency and familiarity across the campus. Plazas should be uniform in their treatment of paving, furnishings, and planting. Limit the paving palette to concrete pavement, so that the value of this palette is not devalued by the frequent introduction of special paving. *See the SITE STANDARDS.*

A successful small plaza at the Haslam Business Building

- Ensure that the plaza is located where it can be activated by building entrances and pedestrian desire lines through the space.

- Ensure that the plaza benefits from some spatial definition - through adjacent building faces, or through an overhead canopy of large deciduous trees. Recognize that successful plazas are typically between buildings rather than surrounding them.

- Ensure that all plazas are set within a high-quality, well-maintained landscape.

- As with all large campus spaces, ensure that a simple plant palette is used within and around the plaza.

The plaza at HPER needs improvement

- Accommodate the healthy growth of plants in plazas and their ease of maintenance by providing adequate planting soil and growing space. Where trees need to be surrounded by pavement, strive for 1,200 CF of growing medium per tree through the use of suspended pavement systems or structural soils. Introduce shrubs into plazas within adequately-sized planting beds that are defined by low walls to control pedestrian traffic. Design plazas to provide adequate color and interest without the reliance on planters due to their intense maintenance requirements.

- Enrich plazas with gestures that reflect the heritage or special character of the space.

QUADRANGLES

Quadrangles are a key element of a successful campus, playing the important role of providing spaces for university groups to come together and with which to identify. The groups may be defined by academic choice or residential proximity, and the resulted spaces differ in character, but the goals for a central space for each are similar - a flexible space that provides identity while accommodating the gathering of groups of all sizes. Campus quads, typically defined on three or four sides by building faces, were shaped at UTK by early campus buildings to the south of Ayres Hall and between Ferris and Perkins Halls. More current examples are infrequent on campus, given the approach to the siting of buildings in the recent past. The notable exception to this is at Presidential Courtyard where the buildings define all four sides of the space. The improvements proposed for this priority project will create a heart for the freshman residential life program at UTK. *See the plan for this priority project in APPENDIX B.*

The successful replacement of pavement with a lawn panel at Clement Hall

Excessive pavement and ill-defined spaces at Presidential Courtyard

- Create quadrangles, where appropriate, to serve as a focus for a campus community, be it residential or academic. Provide pavement that is sized to accommodate the number of anticipated daily users rather than the occasional larger function, recognizing that empty paved areas can undermine a sense of community for the campus. Where possible, visually and spatially connect the paved spaces with adjacent open flat lawn areas used for informal active recreation or for infrequent larger functions.
- Design quadrangles to contribute to a network of campus spaces by employing the campus site standards to achieve a consistency and familiarity across the campus. Limit the paving palette to concrete pavement, so that the value of this palette is not devalued by the frequent introduction of special paving.
- Accommodate desire lines and pedestrian comfort by providing thoughtfully located and shaded concrete walkways within quadrangles.
- Ensure that all quadrangles are set within a high-quality, well-maintained landscape.
- Employ a simple landscape treatment for quadrangles so that the sense of the space does not fall victim to the attention given to the particulars. With the size of the space inversely related to the appropriate level of complexity for the planting, utilize the simplest planting for the largest quadrangles so that the entire space can be viewed without the distraction of numerous species.
- Employ large deciduous canopy trees to shape quadrangles, given their ability to provide both edges and ceilings for “outdoor rooms” while maintaining an openness at eye level. This third dimension, or ceiling, is important to making successful campus spaces.
- Enrich the space with gestures that reflect and celebrate the heritage or special character of the space or the particular community served by the quadrangle.
- Employ the site standards for site furnishings so that the quadrangle contributes to and becomes a part of the campus network of spaces, enhancing both the quadrangle and the campus at large.

PEDESTRIAN MALLS

The replacement of a portion of Andy Holt Avenue with the Joe Johnson and John Ward Pedestrian Mall represents a significant first step in enhancing the University's image as a pedestrian-centric, rather than a vehicular-centric, campus. The Mall provides a linear organizing space for the campus, which is key for a campus as large as UTK. Extension of this Mall to the Hill and farther west towards the Agriculture Campus will serve to further integrate the campus and promote walking on campus. The historical timeline, the centerpiece of the Pedestrian Mall, will be continued westward to commemorate significant milestones in the life of the University. *See the plan for the Pedestrian Mall Extension - West Priority Project in APPENDIX B.*

Successful gathering spaces along the Pedestrian Mall

Inadequate space compromises this last gathering space along the pedestrian mall

- Design pedestrian malls to contribute to a network of campus spaces by employing the campus site standards to achieve a consistency and familiarity across the campus.
- Accommodate intensive pedestrian traffic through a broad expanse of pavement that creates an energizing space for the campus. Utilize building faces to reinforce and define pedestrian malls; ensure that new building faces are related to existing ones.
- Connect adjacent uses to pedestrian malls to ensure that both the building/adjacent space and the mall are activated by each other.
- Incorporate gathering spaces along the edges of pedestrian malls where space permits, the setting is appropriate, and a threshold of users can be anticipated to make the gathering space well used. *The semicircular spaces flanking the Pedestrian Mall successful accommodate the promotion of causes and activities on campus by student groups. The final space, at the southwestern corner of Hess Hall, lacks adequate room, which detracts from the space and the adjacent Mall. See the plan for the Pedestrian Mall Extension - West Priority Project in APPENDIX B.*
- Utilize a paving scheme that is reflective of the significance of the mall. For the extensions of the existing Pedestrian Mall, extend the existing paving scheme through the center of the space and apply existing design approaches to new conditions.
- Provide space for the continuation of the campus timeline in the extensions to the Joe Johnson and John Ward Pedestrian Mall. Enrich all pedestrian malls with gestures that reflect the heritage or special character of the space.
- Ensure that all pedestrian malls are set within a high-quality, well-maintained landscape.

GREAT LAWNS

Campus great lawns often serve as the heart of a campus; they are often the sites for important events in the life of the institution and are sized to accommodate large numbers of the community. At UTK, the largest lawn area lies to the north of Ayres Hall. While this lawn is symbolically significant to the University, giving Ayres Hall added grandeur befitting the quintessential building on the campus, the slope of the lawn prevents it from serving as a gathering space. Circle Park serves that function today, although the roads at its edges, the plantings that restrict site lines through the space, and the grading of the area compromise its success as a gathering space. The other large lawn on campus, the one at Fraternity Park, while compromised by the parking that surrounds it, is an important space for a subset of the UTK community. The closing of Volunteer Boulevard East provides a unique opportunity to incorporate a great lawn into the campus core that will strengthen both Circle Park and the Pedestrian Mall.

- Design great lawns to contribute to a network of campus spaces by employing the campus site standards to achieve a consistency and familiarity across the campus. Limit the paving palette to concrete pavement, so that the value of this palette is not devalued by the frequent introduction of special paving.
- Accommodate desire lines and pedestrian comfort by providing thoughtfully located and shaded concrete walkways that contribute to the great lawn, allowing for movement across the space to meet desire lines, without compromising the space with too many walkways.
- Define the edges of the space by buildings, and grade adjacent landscapes so that they slope into, not away from, the great lawn.
- Grade portions of the lawn panel of the great lawn gently to create usable space for campus events.
- Set great lawns within a high-quality, well-maintained landscape.
- Employ the simplest landscape treatment on the campus – lawns, trees and large shrub masses – for the great lawns so that the grandness of the space does not fall victim to the attention given to the particulars; metaphorically, ensure that the forest does not become obscured by the trees.
- Employ large deciduous canopy trees to shape the edges of great lawns, given their ability to provide both edges and ceilings for "outdoor rooms" while maintaining an openness at eye level. This third dimension, or ceiling, is important to the edges of great lawns.

The great lawn proposed by the 2011 Master Plan

Current view of Volunteer Blvd East, the site for the great lawn proposed by the 2011 Long Range Master Plan

STREETSCAPES

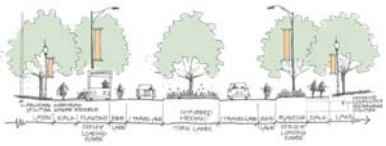

Major Collector

Minor Collector

Local Street

Campus streets are necessary to the functioning of the University, and the streets and the views from them are often the source of first impressions for visitors and prospective students. It is critical that the campus streetscapes convey the image of a high-quality, well maintained and pedestrian-centric landscape, recognizing that no single treatment is appropriate for the variety of streets on campus – the tight urban streetscape of Phillip Fulmer Way, the strong definition of Cumberland Avenue with its bordering walls, the unique setting of Circle Drive on the Hill, the residential character of Melrose Avenue, and the breadth of Volunteer Boulevard.

- For all campus streets, incorporate a consistent approach to the design variables that define streetscapes, including building setbacks and building heights, the landscape at the back of the sidewalk, planter strips, median strips, and lighting with banners.
- Design streetscapes to contribute to a network of campus spaces by employing the campus site standards to achieve a consistency and familiarity across the campus. Limit the pedestrian paving palette to concrete pavement, so that the value of this palette is not devalued by the frequent introduction of special paving.
- Locate light fixtures, both roadway and pedestrian-scaled, to provide an adequate and consistent lighting level along the streetscape. Two light fixtures have been identified for campus streets based on street classification. *See 3.2 DECORATIVE STREET LIGHTS and 3.3 ROADWAY LIGHTS in the SITE STANDARDS. See Figure 5 here and in APPENDIX A for a plan of campus street classification.*
- Enhance street identity with campus signage.
- Ensure that all streetscapes are comprised of, and set within, a high-quality, well-maintained landscape.

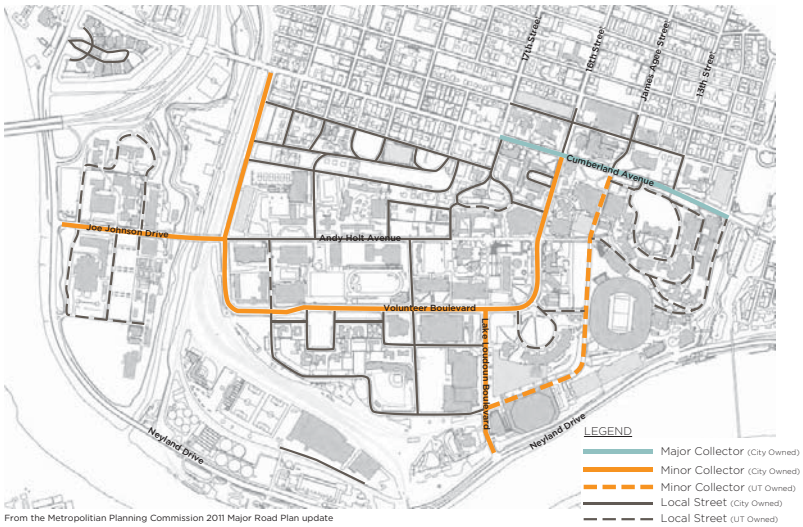

Figure 5: Campus Street Classifications

SURFACE PARKING

While the goal of the University should be the removal of parking from the campus core in an effort to create a pedestrian-focused campus, some parking – handicapped and short-term service – will need to remain. Other parking areas will also persist for their game day value or until a building project is identified for the site, or until the campus is weaned from its dependence on vehicular connections. In order to minimize the visual intrusion and the environmental cost of parking lots, it is critical that parking areas, be they large or small, be given careful attention in the design process.

- Minimize the visual impact of surface parking areas on the campus landscape by grading parking surfaces as close to 2% as possible, recognizing that when a ground plane is tilted toward the viewer, more of the plane is visible, and that all man-made elements in the landscape are rendered less obtrusive when they mimic buildings – with horizontal and orthogonal arrangements.
- Terrace parking lots on sloping sites, taking up grade in parking islands to visually minimize the lot, to create additional areas for planting, to meet accessibility standards, and to ensure user ease and control when opening or closing car doors.
- Lay out parking areas in a simple, organized manner that is orthogonal to adjacent streets or building faces; avoid diagonal parking, where possible, for its increased visual impact.
- For pedestrian safety, organize rows so that the primary pedestrian traffic moves down the aisles rather across the aisles. Ensure that pedestrian traffic through the lot is properly illuminated for safety, but remains in keeping with adjacent pedestrian areas to not create blind spots due to the contrast in light levels.
- Meet the parking standards for the City of Knoxville by providing a minimum of 180 SF per space. Provide an aisle width of 25 feet for 90 degree parking.
- Soften the visual impact of parking with a minimum planting of low shrubs that filter the most visually arresting portions of vehicles - the grills and lights. Where space permits, include an informal planting of evergreen and deciduous trees. Do not attempt to screen views of parking areas with a rigid line of vertical evergreens.
- Shade surface parking by planting deciduous canopy trees at the end of parking rows and along the length of the row, at a spacing of one tree for every ten spaces. Provide a minimum of 360 SF per island and excavate to ensure that a good growing medium is provided to a depth of 24" to achieve a minimum volume of 720 CF per tree.
- Employ stormwater management techniques of using pervious pavement for parking spaces and collecting stormwater in parking islands.
- Consider the use of stabilized lawns for parking areas that are only critical for game day parking.

Low shrubs and a flowering tree as an effective screening of parking on Circle Drive

Intrusive parking at Henson Hall

SPACES BETWEEN AND BEHIND BUILDINGS

While a campus is chiefly comprised of spaces linked by major walkways, a network of secondary connections that are heavily used by the university community serves as a secondary campus "glue." These connections often pass behind buildings, where back of house functions are accommodated. It is important, given the heavily daily use of these connections and spaces, that they not be neglected, but are addressed in a manner that reflects their role as a simple backdrop for the life of the University.

- Design secondary connections to contribute to a network of campus spaces by employing the campus site standards to achieve a consistency and familiarity across the campus. Limit the paving palette to concrete pavement so that the value of this palette is not devalued by the frequent introduction of special paving.
- Employ a simple landscape treatment for secondary connecting spaces that contributes to the campus landscape without calling undue attention to itself.
- Ensure that adjacent uses are well-connected to activate the secondary routes on campus.
- Ensure that there is a clarity of the connecting spaces for navigating the campus and for campus security.
- Ensure that visual sight lines are maintained through the space in keeping with CPTED design guidelines, balancing the desire to have the back of house elements, which are often located near these areas, visually minimized.
- Enhance spaces between and behind buildings by minimizing the visual impact of unattractive, yet necessary elements such as utility structures, service areas, and trash collection areas. When using plantings to screen such elements, ensure that the plantings do not call increased attention to the area to be screened through rigid spacing of atypical species for the landscape. If the element to be screened is situated where the planting of a generous shrub mass can rationally extend beyond the unsightly structure, then the addition of an informal shrub mass can be used successfully. If, however, the structure is located in an area that does not lend itself to a shrub mass, the structure should be downplayed through the use of the campus standard screen fence and through the alignment of circulation to ensure that the structure is not featured in any directed views. Architectural structures such as masonry walls should be considered as an alternate to planting and screen fencing where the structure to be screened abuts a masonry building face. Provide screening of back of house elements that is integrated into the adjacent architecture or landscape. *See 2.15 SCREEN WALLS, 2.16 PRE-FABRICATED SCREENS, and 2.17 ENCLOSURE GATES in the SITE STANDARDS.*

The walkway from the Ayres Hall South Lawn to Dabney-Buehler Hall is pleasant despite the adjacent utilities

One of the major routes from Carrick Hall to TREC passes beside the Carrick Hall dumpster

ENVIRONMENTALLY-SENSITIVE AREAS

The UTK campus, like many urban campuses, is highly developed with little space on campus resembling the landscape that existed prior to the arrival of the University in 1826. First and Second Creeks offer the best opportunities to reconnect the campus to its natural setting and to serve as natural amenities for the University and the City; development of these areas will require environmentally-sensitive design and practices. Other opportunities to engage the University with natural areas will present themselves as the campus aesthetic evolves to allow for the return of some lawn areas to open meadows as might have existed prior to the University's arrival. While set within lawn areas and reflective of a campus rather than a natural landscape, the many mature, heritage trees on campus, some of them State Champions, are of great value to the University. Their root zones need to be treated as environmentally-sensitive areas to ensure the protection of this important campus resource.

- Employ environmentally-appropriate design to connect the campus community to First and Second Creeks without compromising the quality of these resources.
- Employ environmentally appropriate construction methods and materials when improving the campus's connection to First and Second Creeks; construction on the bordering steep slopes will require intensive stormwater management to ensure that the creek is not polluted by the construction.
- Consider the conversion of peripheral, unused, or hard-to-maintain manicured landscaped areas to "natural" and more sustainable landscape areas, either meadows or woodlands, helping to guide the campus toward a new, more environmentally-rich aesthetic. *See 5.4 NATIVE GRASSES AND FLOWERS in the SITE STANDARDS.*
- Protect the campus tree collection by recognizing that the areas surrounding all mature trees are environmentally-sensitive areas. Improve the growing conditions for the valuable heritage trees at the University that play a priceless role in enhancing the campus character.
- Consider coordination with the City to enhance the riverbank where it parallels the campus edge. Removal of invasive vegetation will create a healthier ecosystem along the riverbank while providing a more attractive edge for the campus.

Existing access to Second Creek

Campus heritage tree on the Hill

Campus heritage tree at Lower Drive in need of better growing conditions

INTRODUCTION

In addition to accommodating campus circulation, both pedestrian and vehicular, site paving serves a critical role in campus organization. Site paving adds to the overall character of the campus landscape. While the dominant paving material on campus for pedestrian use will be concrete, other paving materials may be used on the campus to provide a hierarchy of connections and spaces.

Included in This Section

Implementation

- All materials must conform to the Site Standards.
- All paving must conform to ADA standards.
- These site standards apply to all areas of the campus landscape beginning at the face of the building. If a paving material is recommended for an area other than the prescribed material, submit a written narrative to the Campus Planning and Design Committee providing justification for the deviation from the standard. Refer to the Process portion of this document.
- All paving materials shall follow the installation methods noted herein. Facilities Services shall be notified of any replacement or removal of any site paving material. Facilities Services shall be notified of any new installation methods or materials and shall have authority on any technical aspects of the material and its installation.
- In the event a paving material is identified for replacement or removal, Facilities Services are to be notified of submissions to the Campus Planning and Design Committee.
- Prior to the repaving of walkways, assess their location, width, and use levels to determine if they should be rerouted, widened to accommodate pedestrian volumes or service vehicles, narrowed, or eliminated due to recent or projected building renovations.
- All materials located within city right-of-way shall comply with city standards.

1.1 CONCRETE

Application

Concrete shall be the standard pedestrian walking material used throughout campus for all projects. In general, limit the paving palette to concrete pavement so that the importance of this palette is not devalued by the frequent introduction of special paving. Within paved campus spaces, a reoriented or smaller module of concrete scoring may be used to identify the area as a gathering space.

Walkway widths shall be adequate to avoid worn lawn edges due to high pedestrian traffic volumes or service vehicle use. Walkways that have been identified to accommodate service vehicles as well as pedestrians shall have a pavement depth of 8" thickness suitable for light utility vehicles and include a proper subbase.

If concrete is used for service areas where heavy vehicular loading is anticipated then provide sufficient concrete depth, reinforcing steel and subbase thickness to support the expected loading.

Site Standard

Material: Provide 4-inch thick reinforced concrete for walkways less than 6 feet wide and 8-inch thick reinforced concrete for walkways greater than 6-foot width. Provide TDOT Type 1 Portland Cement Concrete. Provide natural gray color.

Finish: Medium broom, perpendicular to the longitudinal axis. Incorporate 3" window paning detail. Stain or integral color concrete is not acceptable due to problems in color matching when future maintenance is required. Stamped concrete is not acceptable due to problems matching the pattern when further maintenance is required.

Control joints: Tooled, 3/8" wide and 1/4 the thickness of the slab deep, spaced at 10' o.c. maximum

Expansion joints: 40' o.c. maximum with adequate aggregate base materials to prevent vertical movement. If the subsoil conditions are inadequate smooth internal dowels at the joints may be used to prevent vertical movement.

Slope: Pitched to drain at 1.5% minimum

Compliance: ADA compliant; Solar Reflectance Index (SRI) of at least 29

1.2 PERVIOUS CONCRETE

Application

Pervious concrete shall be used in low volume areas, sidewalks and parking stall areas.

Site Standard

Material: minimum 6" thick natural grey

Base: 1" clean gravel; the depth of this storage profile depends on the amount of storage required, the permeability of the native base material and the intended use.

Control joints: 3/8" placed using a joint roller at 20' o.c.

Compliance: ADA compliant; Solar Reflectance Index (SRI) of at least 29

1.3 BRICK

Application

Brick shall be used only for selected gathering areas as approved by the Campus Planning and Design Committee.

Site Standard

Material: Standard 4" x 8" rectilinear brick; Paver thickness shall be 2" minimum.

Base: 4" reinforced concrete slab with a 1" thick sand/mortar bed. If brick paving could have the potential for vehicular traffic the base thickness should be consistent with the paving material approaching the brick paving.

Color: General Shale - Flashed Range Red

Pattern: Herringbone, Running Bond, and Basketweave are the preferred brick patterns.

Joints: Tight joints; expansion joints shall be as required for base. (See Section 1.1 CONCRETE)

Slope: Pitched to drain at 1.5% minimum

Compliance: ADA compliant

1.4 CONCRETE PAVERS

Application

Concrete pavers are used to define areas such as plazas, arcades and building entrances. By limiting the installation of pavers to these areas, it enhances the significance placed on these spaces.

Pavers should be oriented in a manner that accents the space and any adjacent structures. Paver layout should also be placed in a manner that eliminates small cut pieces at edges.

Site Standard

Material: Hanover Prest Paver or Belgard

Base: 4" reinforced concrete slab with a 1" thick sand/mortar bed. Provide drainage through the base material.

Colors:

Hanover - Matrix #M3083, Matrix #M2914, Matrix #M2038 and Matrix #M1566. Belgard - UTK 10, UTK 20, UTK 30, and UTK 40

Pattern: Basketweave, Herringbone, or Running Bond

Joints: 1/8" swept joints butted together

Slope: Pitched to drain at 1.5% minimum

Compliance: ADA Compliant

1.4 CONCRETE PAVERS (cont'd)

Alternative Site Standard

Alternative site standard concrete pavers shall be used in selected locations as approved by Facilities Services.

Material: Cambridge Cobble or equal with 6 x 6 sq. unit and a 6 x 9 rectangular unit available from Belgard. Paver shall be minimum 2 3/8" thick.

Base: 4" reinforced concrete slab with a 1" thick sand/mortar bed. Provide drainage through the base material.

Color: Ardennes Gray

Pattern: "K" Pattern

Joints: 1/8" swept joints butted together

Slope: Pitched to drain at 1.5% minimum

Compliance: ADA compliant

1.5 PERVIOUS PAVERS

Application

Pervious pavers shall be used in low volume areas, sidewalks and parking stall areas. Pavers shall be solid units with granular jointing. Open cell pavers are not permitted Usage is subject to approval by the Campus Planning and Design Committee.

Site Standard

Material: Brick or concrete unit pavers

Base: 1" clean gravel; the depth of this storage profile depends on the amount of storage required, the permeability of the native base material and the intended use.

Color: Match brick or unit paver standard colors.

Joints: Fill with appropriately sized granular material to allow for infiltration.

Compliance: ADA compliant

1.6 NATURAL STONE PAVERS

Application

Natural stone pavers shall be used for selected gathering areas and only at flagship or monumental buildings. Usage is subject to approval by the Campus Planning and Design Committee.

Site Standard

Material: Rough hewn, saw cut or flamed natural stone pavers. Stone sizes shall vary. Minimum size shall be 12"x12"x1.5" thick. Maximum size shall be 24"x36"x1.5".

Base: 4" reinforced concrete slab with a 1" thick sand/mortar bed.

Color: Mix of dark and light grey

Pattern: Random ashlar

Joints: 3/8" mortar joints

Slope: Pitched to drain at 1.5% minimum

Compliance: ADA compliant

1.7 PEDESTAL MOUNT PAVERS

Application

Where pedestrian walkways are placed over built and habitable architecture and the available cross section distance between impervious roof membrane and pavement system does not allow for a traditional aggregate base then use concrete pavers mounted above the roof deck with approved pedestals.

Site Standard

Material: Consistent materials and colors as other unit paving materials in the site standards.

Requirements: Pedestals shall be adjustable to provide a uniform walking surface and allow for a sloping roof surface.

Compliance: ADA compliant

1.8 PATH SCREENING

Application

In locations where surface grading is no greater than 2 percent and as approved by the Campus Planning and Design Committee, crushed stone fines/screenings can be used for pathways that are lightly used by pedestrians.

Site Standard

Material: Minimum 2" limestone fines/screening

Base: Minimum 4" compacted aggregate

Color: Natural blend

Edging: Metal edging shall be used on both sides, a minimum of 6" in height. (See Section 5.12 METAL BED EDGING)

Compliance: None

1.9 ASPHALT

Application

Use asphalt paving for vehicular roadways, parking lots and back-of-house service ways.

For those situations where heavy pedestrian use coincides with service vehicles, use an 18 to 24-inch wide band of concrete unit pavers installed on both sides of service way at the bottom of the curbing to articulate the pedestrian nature of the pavement. (See Section 1.4 CONCRETE PAVERS)

Site Standard

Material: Surface course shall be 1.5" thick with a 2.5" thick asphaltic concrete binder

Base: 8" thick minimum bed of aggregate. All asphalt applications must demonstrate that the surface course thickness and aggregate base are sufficient for design loading and soil conditions prior to approval and installation.

Color: Black

Slope: Pitched to drain at 1% minimum

Compliance: ADA compliant

1.10 CURB AND GUTTER

Application

Curb and gutter shall be appropriate for the intended use and meet the specifications of the Tennessee Department of Transportation (See TDOT, STANDARD SPECIFICATIONS FOR ROAD AND BRIDGE CONSTRUCTION; SECTION 702 CEMENT CONCRETE CURB, GUTTER, AND COMBINED CURB AND GUTTER)

Curb and gutter in parking lots shall be appropriate for the intended use and meet the specifications of the City of Knoxville parking ordinance.

Site Standard

Material: Class A Concrete

Finish: Smooth, even; remove all tool marks

1.11 CROSSWALKS

Application

Crosswalks shall be provided at all areas where pedestrian traffic intersects with vehicular traffic. Crosswalks shall be located and constructed according to all applicable standards. Crosswalk locations are subject to review by the traffic safety committee.

Site Standard

Material: University streets - white thermoplastic with 24" longitudinal lines, 10' wide at 4' o.c, spacing. 24" wide stopbars to extend the width of the traffic lane and shall be offset 5' from the crosswalk.

Compliance: City or state governing agency details and as approved by the Campus Planning and Design Committee.

1.12 RAISED PEDESTRIAN TABLES

Application

At midblock crossings and non-signaled intersections raised pedestrian tables may be used to control traffic and provide safe crossing for pedestrians. Locations for raised pedestrian tables are to be apporved by the Campus Planning and Design Committee.

The speed table shall be 3.5" above the roadway. Widths of the pedestrian table should be consistent with the pedestrian volume. In most cases, these are high use areas and a 12' flat width should be considered. The length of the speed table transition ramps should match on either side as grade allows. Chevrons are to be applied on the aprons to indicate grade change for oncoming traffic. Tactile warning plates shall be placed at each end.

Site Standard

Material: Poured-in-place concrete and concrete unit pavers

Compliance: ADA compliant for pedestrian traffic; TDOT compliant for vehicular traffic

1.13 SPECIALITY STREET PRINT OR PATTERNS

Application

Permanent speciality street print and patterns shall be used selectively in locations as approved by the Campus Planning and Design Committee. Specialty street print shall not conflict with any safety markings for pedestrian or vehicular traffic. Material, finish, color, pattern, and graphics are based on the application. Specialty street print and patterns must not interfere with ADA compliance requirements.

1.14 TACTILE WARNING PLATE

Application

Tactile warning systems shall be placed on curb cuts. Detectable warning domes shall be aligned on a square grid in the predominant direction of travel to permit wheels to roll between domes. Tactile warning systems shall be located at back of curb. Installation shall be integral with concrete surface.

Site Standard

Material: The detectable warning area shall be a minimum of 4ft long and 2ft wide.

Color: Black

Compliance: ADA Compliant

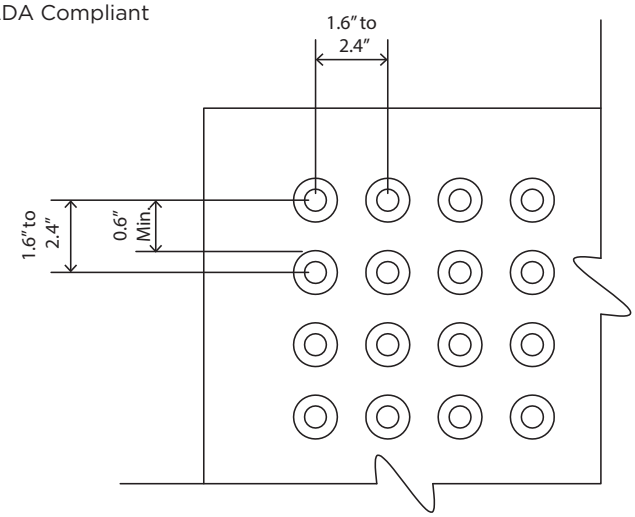

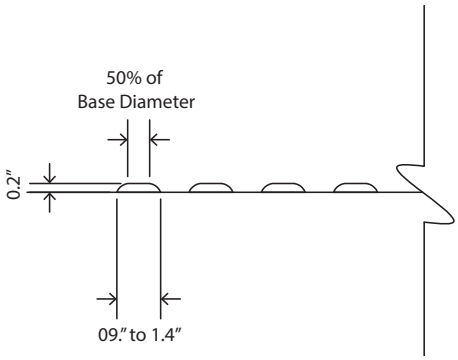

INTRODUCTION

Site furnishings play an important role on a campus, delivering a subtle "You are here" message each time they are encountered. For large campuses like UTK, which, by virtue of their size and setting, lack a single defining character, the use of a standard palette of site furnishings is a device that should not be ignored in an effort to create a cohesive campus.

Included in This Section

Implementation

- All materials shall conform to the Site Standards.
- If an equivalent is recommended, a written narrative shall be submitted to the Campus Planning and Design Committee. Refer to the Process portion of this document.
- All furnishings shall follow manufacturer's recommendations for installation and/or mounting. Facilities Services shall be notified of any new installation, replacement or removal of any furnishing and material. Facility Services has authority on any technical aspects of the furnishing/material.
- In the event a furnishing or material is identified for replacement or removal, Facilities Services will facilitate this process. Refer to the Process portion of this document.
- All site standards shall be implemented from the face of the building. Any nonconforming site standard beyond this limit will require approval of the Campus Planning and Design Committee.
- All site furnishings located within city right-of-way shall comply with city standards.

2.1 BENCHES

Application

Benches shall be selected for the anticipated length of use. For areas where individuals would feel comfortable sitting and studying for an afternoon, benches with backs are appropriate. For areas outside a building entry, where the use would be related to the waiting or meeting up, a backless bench is appropriate.

Benches shall be selected for the character and the size of the space. For areas like the Ayres lawn, with its spacious lawn and park-like setting, a bench with a back is easily absorbed by the space, while a backless bench should be used to keep small gathering areas at building entries simple and uncluttered.

Benches shall be selected for the openness of the space. Where plantings provide enclosure and a setting for a bench, a bench with a back can be accommodated. Where spaces are open, a backless bench will be most appropriate to not interrupt the flow of the space.

The location of benches should not be based upon their decorative potential, but upon the desirability of the location for sitting and gathering.

The use of a bench for memorials is subject to the approval of the Campus Planning & Design Committee.

Site Standard

Product:	Timberform Renaissance bench + armrests, or approved equiv.
Manufacturer:	Columbia Cascade
Product Number:	2806-6 (or 2806-MP for memorials)
Color:	Black powder coat finish
Contact:	(800) 547-1940
Website:	www.site-furnishings.columbia-cascade.com

Product:	Cityview backed bench or approved equivalent
Manufacturer:	Sitescapes
Product Number:	CV1-1000
Color:	Black powder coat finish
Contact:	(402)421-9464
Website:	www.sitescapesonline.com

Product:	Keystone Ridge backed bench or approved equivalent
Manufacturer:	Keystone Ridge Designs
Product Number:	P26
Color:	Black powder coat finish
Contact:	(800) 284-8208
Website:	www.keystoneridgedesigns.com

Product:	Timberform Renaissance backless seat + armrests or approved equivalent
Manufacturer:	Columbia Cascade
Product Number:	2802-6
Color:	Black powder coat finish
Contact:	(800) 547-1940
Website:	www.site-furnishings.columbia-cascade.com

Product:	Cityview backless bench or approved equivalent
Manufacturer:	Sitescapes
Product Number:	CV1-1100
Color:	Black powder coat finish
Contact:	(402)421-9464
Website:	www.sitescapesonline.com

Product:	Keystone Ridge backless bench or approved equivalent
Manufacturer:	Keystone Ridge Designs
Product Number:	P16
Color:	Black powder coat finish
Contact:	(800) 284-8208
Website:	www.keystoneridgedesigns.com

2.2 TABLE SETS

Application

Tables and benches shall be used where long-term seating is anticipated. All tables sets should be equipped with umbrella holes, regardless of presence or absence of umbrella. This is the decision of the campus to make retro-fitting umbrellas possible.

Direct embed mounting is the preferred mounting option. Pedestal mount shall be used in circumstances when direct mount is prohibitive. Ensure that some tables within group have three benches to accommodate users in wheelchairs.

Site Standard

Product:	Timberform Renaissance round table with center support Timberform Renaissance seat or approved equivalent.
Manufacturer:	Columbia Cascade
Product Number:	
Table:	Round - 2912-0044-E or P (3' 6" Dia.) Square - 2912-4444-E or P (3' 6") Round w/ umbrella hole- 2914-0044-E or P-M w/center support (M indicates modification for 3.75" dia. umbrella hole) Square w/ umbrella hole- 2914-4444-e or P-M w/center support (M indicates modification for 3.75" dia. umbrella hole)
Chair:	Backless - CV5-1001 With Back - 2910-20

2.2 TABLE SETS (cont'd)

Color:	Black powder coat finish
Contact:	(800) 547-1940
Website:	www.site-furnishings.columbia-cascade.com

Product:	Cityview Carousel Table
Manufacturer:	Sitescapes
Product Number:	
Table Sets:	Round two seater - CV6-3130-2-UT Round three seater - CV6-3130-ADA-UT Round four seater - CV6-3140-UT Round five seater - CV6-5100-ADA-UT Round sixe seater - CV6-6100-UT
Chair:	Backless - CV1-740 With Back - CV1-7040
Color:	Black powder coat finish
Contact:	(402)421-9464
Website:	www.sitescapesonline.com

2.3 SHADE UMBRELLA

Application

Shade umbrellas are to be used as a companion with the table sets.

Site Standard

Product:	Perforated Aluminum Umbrella, 7'x7'
Manufacturer:	Canterbury International or approved equivalent
Color:	Pole: Black powder coat finish
	Panels: Sterling
Contact:	(800) 935-7111
Website:	www.canterburyinternational.com

Product:	Perforated Aluminum Umbrella
Product Number:	UM3091-AL
Manufacturer:	Sitescapes
Contact:	(402)421-9464
Website:	www.sitescapesonline.com

2.4 SWINGS

Application

In the event that an existing swing is to be replaced, it shall be replaced with the current site standard. Only benches with backs shall be used as swings.

Swings shall be reinforced and anchored to withstand the movement of the swing.

Site Standard

Product:	
Manufacturer:	Columbia Cascade
Product Number:	5' - 13145-T-P3
	6' - 13145-T-P1
Color:	Black Powder-coat finish
Contact:	(800) 547-1940
Website:	www.site-furnishings.columbia-cascade.com

Product:	Cityview Glider
Manufacturer:	Sitescapes
Product Number:	CV1-1000-UT
Color:	Black powder coat finish
Contact:	(402)421-9464
Website:	www.sitescapesonline.com

2.5 BIKE RACKS

Application

Bike racks shall be placed on a paved pad along a walkway within visual proximity of building entrances. Bikes shall be placed where they can be accessed without navigating steps. Where possible, place racks under building overhangs to provide weather protection without detracting from the building entrance.

Space racks at a minimum of 30" o.c., 36" is preferred. Follow manufacturer's and the University's standards for other critical dimensions. Surface mounting is the preferred installation method

Site Standard

Product:	Dero Hoop Rack or approved equivalent
Manufacturer:	Dero Bike Rack Company or approved equivalent
Color:	Black powder coat finish
Contact:	(888) 337-6729
Website:	www.dero.com

Product:	Apex Bike Rack
Manufacturer:	Sitescapes
Color:	Black powder coat finish
Contact:	(402)421-9464
Website:	www.sitescapesonline.com

2.5 BIKE RACKS (cont'd)

Product:	Cycloops
Product Number:	2170-3-01
Manufacturer:	Columbia Cascades
Color:	Black powder coat finish
Contact:	(800) 547-1940
Website:	www.site-furnishings.columbia-cascade.com

2.6 PLANTERS

Application

Consider carefully the potential maintenance burden of, and alternatives to, planting flowers in planters prior to incorporating them into the campus landscape. Planter locations shall be as approved by the Campus Planning and Design Committee. Irrigaiton must be included in planter installation.

Site Standard

Manufacturer:	Wausau or approved equivalent
	TF4110 (shown) - 48" Dia. x 24" TF4115 - 48" Dia. x 26" (includes level ring) TF4125 - 60" Dia. x 17" TF4213 - 96" x 48" x 36" TF4214 - 96" x 96" x 36"
Material:	Planters shall be filled with 4" of No. 57 stone gravel topped with potting soil up to 1" below the top of planter. Provide non-woven geotextile fabric between soil and gravel layers.
Requirements:	Planters shall be purchased with extra 2" diameter hole at bottom to provide for irrigation access.
Color:	W21 – Buff Weatherstone or W-22 Sand Weatherstone
Contact:	(800) 388-8728
Website:	www.wausautile.com

2.7 LITTER AND RECYCLING RECEPTACLES

Application

Litter and recycling receptacles shall be placed at locations that allow for ease of use and maintenance while not adding to the visual clutter of a space. Decals to note trash or recycling can be added and shall be approved by the Campus Planning and Design Committee.

Site Standard

Product: Litter and recycling receptacles with rain bonnet lids, side-doors, and direct embedment or surface mounted.

Manufacturer: Victor Stanley or approved equivalent

Product Number: SD-42 (36 Gal) Single Container
SD-242 (36 Gal) Mega-Can Double Container

Color: Black with green rain bonnet, powder coat finish.

Contact: (800) 368-2573

Website: www.victorstanley.com

Product: Cityview litter and recycling receptacles with rain bonnet lids, side-doors, and direct embedment or surface mounted

Manufacturer: Sitescapes

Product Number: CV2-2101 Single Container
CV2-6101R Double Container

Color: Black with green rain bonnet, powder coat finish.

Contact: (402)421-9464

Website: www.sitescapesonline.com

2.8 ASH RECEPTACLES

Application

All ash receptacles shall be placed at a minimum of 25 feet from building entries, outdoor air intakes and operable windows. All ash receptacles shall be placed in designated smoking areas.

Site Standard

Product: Buttler Ash Receptacle

Manufacturer: Forms + Surfaces or approved equivalent

Product Number: SUBUT-MDS (Medium Buttler, pole mount)
SUBUT-MDW (Medium Buttler, wall mount)

Color: Black powder coat finish

Contact: (800) 451-0410

Website: www.forms-surfaces.com

2.9 TRAFFIC BOLLARDS

Application

Traffic bollards shall be connected together with heavy duty powder-coated steel chains with pad locks to allow service and emergency vehicle access.

Site Standard

Product:	Traffic bollard
Manufacturer:	Antique Street Lamps, Inc. or approved equivalent
Product Number:	Chicago series cast aluminum bollards Anchor Mount: BCA BCH12DT ANBK EBB Removable Mount: BCA BCH12DT ANBK EBB REM/LOK
Color:	Black powder coat finish
Contact:	(512) 977-8444; (800) 410-8899
Website:	www.antiquestreetlamps.com

2.10 PEDESTRIAN BOLLARDS

Application

Pedestrian bollards can be connected together with powder-coated steel chains if necessary.

Site Standard

Product:	Steel pipe pedestrian bollard
Manufacturer:	Creative Pipe or approved equivalent
Product Number:	Direct Embedment - CBR 4" dia Removable Mount - Eliminator 4" dia
Material:	Steel
Color:	Black powder coat finish
Contact:	(800) 644-8467
Website:	www.creativepipe.com

Product:	Steel pipe pedestrian bollard
Manufacturer:	Columbia Cascades
Product Number:	Direct Embedment - 2190 Removable Mount - 2190 RH
Material:	Steel
Color:	Black powder coat finish
Contact:	(800) 547-1940
Website:	www.site-furnishings.columbia-cascade.com

Product:	Steel pipe pedestrian bollard
Manufacturer:	Sitescapes or approved equivalent
Product Number:	Direct Embedment - BP4-00-EM-UT Removable Mount - BP4-00-RM-UT

Material:	Steel
Color:	Black powder coat finish
Contact:	(800) 644-8467
Website:	www.creativepipe.com

2.11 ORNAMENTAL PICKET FENCING

Application

Campus fencing shall be installed where enclosure is needed. The design shall be a simple picket fence, which is timeless in design and in character with the campus. In low pedestrian traffic situations, a manufactured fencing system will be allowed, provided it visually matches the tubular steel fence design.

If pilasters are incorporated, they shall adhere to the standards set forth in 2.19 SITE AND RETAINING WALLS and 4.2 MINOR SITE COLUMNS.

Site Standard

Material:	Commercial grade powder-coated aluminum or steel Height: 5'-10' Vertical Pickets: 3/4" at 4" max. o.c. to extend past top rail Posts: 2" x 2" at 5' o.c., evenly spaced Rails top and bottom: 2" x 2", two top rails Pilasters: Brick with a limestone or pre-cast concrete cap
Color:	Black powder coat finish
Compliance:	Compliant with local building code standards

2.12 CHAIN-LINK FENCING

Application

Black vinyl coated chain-link fence may be used in back-of-house locations on campus to limit access or provide enclosure with prior approval from Facilities Services. Depending on the requested location and project details, further approval may be required from the UTK Campus Planning and Design Committee.

Site Standard

Material:	Chain-link fencing (Up to 6' in height) Fabric: 9 Gauge, 2" Mesh, Black Vinyl Coated Top rail and bottom rail when desired: 1-5/8" Dia. Schedule 40 pipe Line Post: 2" or 2-1/2" Dia. Schedule 40 Pipe, diameter used dependent on desired function and height Terminal Post: 3" Dia. Schedule 40 Pipe Tension Wire: 7 Gauge Coated General Note - All Posts Anchored in Concrete to a Minimum Depth of 18"
Color:	Fabric & tension wire – black vinyl coating, All other materials – black powder coat finish

2.13 HANDRAILS

Application

Ornamental handrails shall be installed at all steps and ramps. The design of the handrails shall be simple, which is timeless in design and in character with the campus.

Site Standard

Material:	Powder-coated steel Height: 34” Posts: 1 1/2” outside Dia. at 5’ o.c., evenly spaced Rails top and bottom: 1 1/2” outside diameter
Manufacturer:	Sherwin Williams
Color:	Primer: Corothane I Mio-Aluminum B65S14 Paint: Corothane I HS Aliphatic Finish Coat B65-60 Series Black
Manufacturer:	Glidden - Graning
Color:	Primer: 9360 - 9370 Severe Conditions Paint: 9800 DTM Urethane Mastic 9879419 Black
Compliance:	ADA compliant

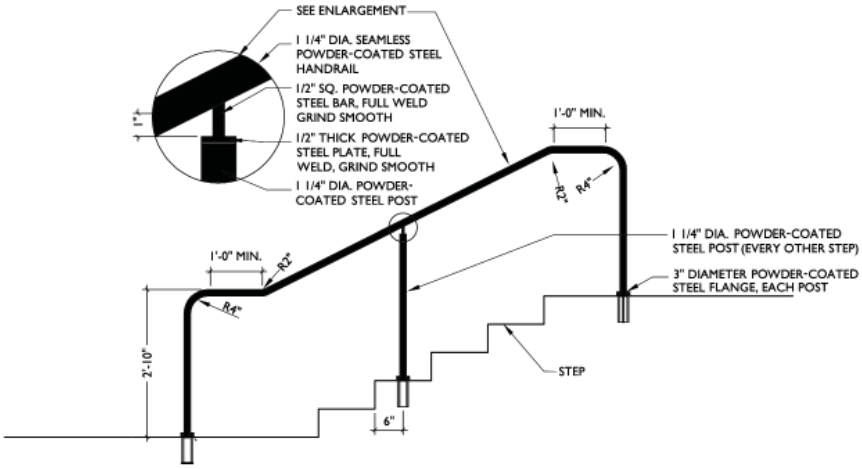

2.14 ORNAMENTAL HANDRAILS

Application

Handrails shall be installed at historic buildings and approved by the Campus Planning and Design Committee.

Site Standard

Material:	Powder-coated steel Height: 34” Posts: 42” Steel Post #331L by Julius Blum & Co or approved equal

Rails: #4428 by Julius Blum & Co or approved equal welded to a metal 1" channel

Manufacturer: Sherwin Williams

Color: Primer: Corothane I Mio-Aluminum B65S14
Paint: Corothane I HS Aliphatic Finish Coat B65-60 Series Black

Manufacturer: Glidden - Graning

Color: Primer: 9360 - 9370 Severe Conditions
Paint: 9800 DTM Urethane Mastic 9879419 Black

Compliance: ADA compliant

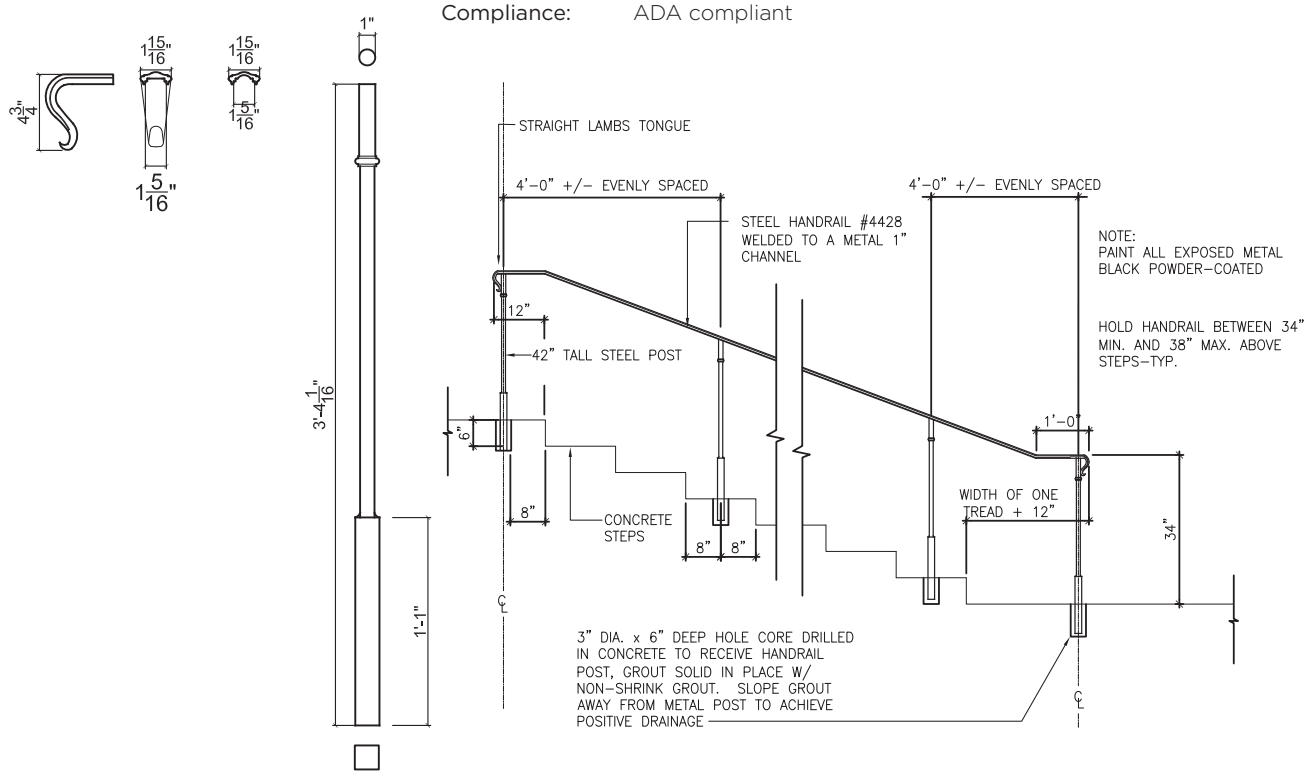

2.15 GUARDRAILS

Application

Guardrails shall be provided where required due to elevation changes adjacent to pedestrian ways. The design shall be a simple picket guardrail, which is timeless in design and in character with the campus. Guard rails, and the retaining walls on which they are mounted, shall be held level in order to visually minimize them.

Site Standard

Material: Aluminum or Steel
Height: 42"
Vertical Pickets: 3/4" at 4" max. o.c.
Posts: 2" x 2" at 5' o.c., evenly spaced
Rails top and bottom: 2" x 2" square

Color: Black powder coat finish

2.16 SITE STAIRS

Application

Where site stairs are needed to navigate elevation changes on campus, they should be an extension of the campus site wall standard (Section 2.19 Site and Retaining walls). Where site walls are not required, the appropriate handrail should be utilized (Section 2.13 Handrails). Treads, risers, runnels and landings should be concrete and meet the concrete standards (Section 1.1 concrete). Site stair locations and design should be brought to the Campus Planning and Design Committee for approval.

Site Standard

Material: Concrete. 1/2" radius nose at the end of each tread with 1" turn back

Tread Depth: Minimum 16" tread depth. Slope tread 1/8" per foot to drain

Compliance: State and City of Knoxville Building Code

2.17 BICYCLE RUNNEL

Application

Where site stairs are needed to navigate elevation changes on campus, a bicycle runnel should be provided. The runnel should facilitate walking a bicycle up or down a stairway. Channel dimensions should be sufficient to accommodate and guide a variety of bicycle tires.

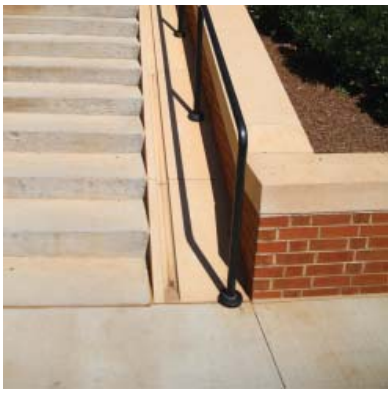

2.18 SEAT WALLS

Application

Numerous types and styles of seat walls exist on campus. When a new wall is to be constructed adjacent to an existing wall that does not meet the site standards, the Campus Planning and Design Committee shall direct how the new wall will interface with the existing. Otherwise, seat walls shall be constructed of the 'campus blend' brick to meet the campus standard for brick for buildings and gateways.

Existing limestone walls are an important campus feature and shall be protected. When removal of limestone walls is required by new construction, they shall be replaced in kind to blend with the existing wall. Limestone walls are located at the following: Walters Life Sciences, Strong Hall, Tyson Alumni Center, Andy Holt Avenue West, and the Interior Design Program building.

Walls shall be designed to relate to the pedestrian scale of the campus. Keeping wall heights between 18" and 24" provide a comfortable seating height.

Low walls, at seating height, shall be used in high pedestrian circulation/ concentration areas to aid pedestrian flow.

Skate board deterrents are not allowed but will be considered as a deviation if physical controls are deemed necessary in place of enforcement or other design considerations.
If a seat wall is located near a gathering area, electrical outlets shall be provided. (See 6.6 OUTDOOR ELECTRICAL OUTLETS)

Site Standard

Material: General Shale 'campus blend' brick. Pre-cast cap color to be Baxter UTR-19 or approved equal. Limestone cap color to be Indiana Limestone Fabricators Eureka Buff Range 'C'.

Pattern: Alternate every other course between a running bond and a Flemish bond

Joints: General Shale "Seashell" or approved equal

2.19 SITE AND RETAINING WALLS

Application

Numerous types and styles of site and retaining walls exist on campus. When a new wall is to be constructed adjacent to an existing wall that does not meet the site standards, the Campus Planning and Design Committee shall direct how the new wall will interface with the existing. Otherwise, site and retaining walls shall be constructed of the 'campus blend' brick to meet the campus standard for brick for buildings and gateways.

Existing limestone walls are an important campus feature and shall be protected. When removal of limestone walls is required by new construction, they shall be replaced in kind to blend with the existing wall. Limestone walls are located at the following: Walters Life Sciences, Sophronia Strong Hall, Tyson Alumni Center, Andy Holt Avenue West, and at the Interior Design Program building.

Walls shall be designed to relate to the pedestrian scale of the campus. When walls are located adjacent to pedestrian walkways, keeping the wall height under 42" is helpful in creating comfortable pedestrian spaces.

Skate board deterrents are not allowed but will be considered as a deviation if physical controls are deemed necessary in place of enforcement or other design considerations.

Site Standard

Material: Site and retaining wall of General Shale (or approved equivalent) 'campus blend' brick to meet campus standard for buildings and gateways with pre-cast or limestone cap

Pattern: Alternate every other course between a running bond and a Flemish bond

Joints: General Shale "Seashell" or approved equal

2.20 SCREEN WALLS

Application

Where service or utility areas abut masonry buildings or where space is restrictive, screen walls shall be considered to restrict views of the service area and utilities within. Wall height shall be as required to provide proper screening of objectionable views.

When a new wall is to be constructed adjacent to an existing building wall that is not constructed of the campus standard brick, the Campus Planning and Design Committee shall direct how the new wall will interface with the building. Otherwise, screen walls shall be constructed of the 'campus blend' brick (with a basketweave or solid pattern), to meet the campus standard for brick for buildings and gateways.

Where possible, service and utilities shall be consolidated in service/utility yards for efficient use of enclosure structures.

Site Standard

Material: Screen wall of General Shale (or approved equivalent) 'campus blend' brick to meet campus standard for brick for buildings and gateways with pre-cast cap

Pattern: When screen walls are solid, alternate every other course between a running bond and a Flemish bond.

When screen walls are basketweave pattern, provide a Flemish bond course separating every four courses of basketweave coursing. The basketweave pattern begins after the first full brick length from the column of each row.

Joints: General Shale "Seashell" or approved equal

2.21 PRE-FABRICATED SCREENS

Application

Where service or utility areas are set within a restricted space that does not allow for vegetative screening and where masonry walls are inappropriate, pre-fabricated metal screens shall be used. Screen height shall be as required to provide proper screening of objectionable views. Minimum screen height 6 feet.

Where possible, service and utilities shall be consolidated in service/utility yards for efficient use of enclosure structures. When used with Enclosure Gates the components shall match. (See 2.22 ENCLOSURE GATES)

Site Standard

Manufacturer:	Orsogril or approved equivalent
Product number:	Talia 100 or 80, Horizontal, 100% or 80% opaque
Color:	Black powder coat finish
Contact:	(800) 523-0973
Website:	www.atironworks.com

Manufacturer:	iDeal or approved equivalent
Product number:	iDeal Louvres Horizontal, 100% or 80% opaque

Color:	Black powder coat finish
Contact:	(877)323-6496
Website:	www.ideal-ap.com

2.22 ENCLOSURE GATES

Application

Where access permits, provide gates for service/utility areas. Where possible, service and utilities shall be consolidated in service/utility yards for efficient use of enclosure structures. When used with Pre-Fabricated Screens the components shall match. (See 2.21 PRE-FABRICATED SCREENS)

Site Standard

Manufacturer:	Orsogril or approved equivalent
Product number:	Talia 100 or 80 Gate, Horizontal, 100% or 80% opaque
Color:	Black powder coat finish
Contact:	(800) 523-0973
Website:	www.atironworks.com

Manufacturer:	iDeal or approved equivalent
Product number:	iDeal Louvres Gates
Color:	Black powder coat finish
Contact:	(877)323-6496
Website:	www.ideal-ap.com

2.23 PRINTED MEDIA BOXES

Application

Printed media boxes shall be installed on campus at key campus gathering areas to minimize the visual clutter of numerous paper boxes.

Site Standard

Manufacturer:	Rak Systems or approved equivalent
Product number:	Model 100 Coin Operated News Rack w/Dome Top
Color:	Black, electro-galvanized powder coated finish
Contact:	(800) 467-1725
Website:	www.raksystems.com

2.24 EMERGENCY PHONES

Application

Emergency phones shall be installed on campus in locations specified by the University. Phones shall be installed on pavement or on a concrete pad adjacent to the pavement edge; pad shall be sized to accommodate wheelchair access.

Site Standard - Pedestal Unit

Manufacturer:	Code Blue or approved equivalent
Product Number:	PAS 1-d Pedestal Unit with IA4100 Keypad
Color:	Gloss White
Graphics:	"Emergency" in Reflective Orange and 4x 6 University of Tennessee Logo
Voltage:	120v
Power Option:	Line Power
Communication Option:	Line Communication
Second Opening:	Directory Plate
Lighting:	A-700 LED Area Light
Vent:	Passive
Contact:	(800) 205-7186
Website:	www.codeblue.com

Site Standard - Wall Mount Unit

Manufacturer:	Code Blue or approved equivalent
Product Number:	PAS 2-e Wall Mount Unit with CB4100 Keypad
Finish:	Stainless Steel
Graphics:	"Emergency" in Reflective Orange and University of Tennessee Logo
Voltage:	120v
Power Option:	Line Power

Communication Option:	Line Communication
Second Opening:	None
Lighting:	None
Vent:	None
Contact:	(800) 205-7186
Website:	www.codeblue.com

2.25 BICYCLE REPAIR STATIONS

Application

The station includes all the tools necessary to perform basic repairs. The tools and air pump are securely attached to the stand with stainless steel cable.

Site Standard

Manufacturer:	Dero or approved equal
Model:	Fixit with Air Kit 2
Finish:	Black Powder-coated
Wall Setback:	12" minmum at back of station
Side Clearance:	45" minimum on both sides of station
Approach Clearance:	60" setback from streets and walkways.
Compliance:	No part of the station should protrude into walkways, common areas, bike lanes or streets.
Contact:	(888) 337-6729
Website:	www.dero.com/products/fixit

2.26 WATER BOTTLE FILLING STATION

Application

Outdoor water bottle filling stations help reduce plastic water bottle waste on campus. Water bottle filling stations shall be mounted on a smooth, flat, finished concrete surface with adequate support (300 lb. load maximum). Orient water bottle filling station or provide enough room on pad to accommodate wheelchair access.

Site Standard

Manufacturer:	Elkay or approved equivalent
Model:	LK4410BF-FRK with freeze resistant valve
Color:	Black
Plumbing Requirements:	3/8" o.d. unplated copper supply w/ shut off valve, 1-1/4" IPS waste
Mounting:	Shall be mounted 2' x 2' x 4" concrete pad

2.27 TRASH COMPACTORS AND TRASH AND RECYCLING DUMPSTERS

Application - Trash Compactors

Trash compactors shall be located at service areas that are not highly visible. They shall be self contained and have connections to sanitary sewer and pressurized hot and cold water. A capacity fill gauge with radio signal/e-mail alert and an ozone controller for odor control shall be provided.

The paved approach to the compactor shall be able to accommodate trucks with gross vehicle weight ratings of 56,000-60,000 pounds.

Site Standard

Manufacturer:	Nedland Industries or approved equivalent
Model/Capacity:	NSC-200-20 (20 CY) NSC-200-30 (30 CY) NSC-200-35 (35 CY)
Color:	Black
Horizontal Clearance:	12' minimum
Vertical Clearance:	18' minimum
Contact:	(800) 447-4925
Website:	www.nedland.com

Application - Trash Dumpsters

Trash dumpsters shall be located at service areas that are not highly visible. The paved approach to the dumpster shall be able to accommodate trucks with gross vehicle weight ratings of 56,000-60,000 pounds.

Site Standard

Manufacturer:	Vulcan Manufacturing or approved equivalent
Model/Capacity:	8 Yard Sliding Door
Color:	Black
Horizontal Clearance:	12' minimum
Vertical Clearance:	18' minimum
Contact:	(888) 526-5241
Website:	www.vmidumpsters.com

Application - Recycling Dumpsters

Recycling dumpsters shall be located at service areas that are not highly visible. The paved approach to the dumpster shall be able to accommodate trucks with gross vehicle weight ratings of 56,000-60,000 pounds.

Site Standard

Manufacturer:	Bakers Waste Equipment or approved equivalent
Model/Capacity:	2, 4, 6 and 8 yard
Color:	Green (bottles, cans or single stream), blue (paper) and brown (cardboard)
Horizontal Clearance:	12' minimum
Vertical Clearance:	16' minimum
Contact:	(800) 221-4153
Website:	www.bwe-nc.com

2.28 BUS STOPS

Application

Bus stops were provided by Knoxville Area Transit (KAT) and ownership transferred to the university. Bus stop shelters accommodate the needs of bus stop users by providing shade, ample space adjacent to the sidewalk for waiting, and seating, as well as additional flexible seating outside the shelter via low site walls. Provide space within the shelter to accommodate passengers in wheel chairs.

Locations shall be coordinated with UT Parking & Transit Services.

Manufacturer:	TBD
Product Number:	TBD
Color:	Black
Standard Widths:	4',6', and 8'
Standard Lengths:	8', 10', 12', 16' and 20'

2.29 ELECTRIC VEHICLE CHARGING STATION

Application

In collaboration with the Oak Ridge National Laboratory, electric vehicle charging stations are installed on campus near the Environmental and Landscape Lab and north of the Natalie L. Haslam Music Center.

Canopy structures are planned for the locations and will integrate photovoltaic panels into the roof structure. These structures shall have a consistent design at each location to fit within the campus aesthetic.

Site Standard

Manufacturer:	Blink
Model:	Level 2 Commercial Pedestal Charger
Input:	240 volt AC
Contact:	(888) 998-2546
Website:	www.blinknetwork.com

2.30 SPECIAL FEATURES

Application

The installation of special features on campus - memorials, sculpture, and fountains - shall be subject to the approval of the Campus Planning and Design Committee.

Special consideration shall be given to the siting of these features to ensure the proper placement within the campus landscape.

INTRODUCTION

Lighting fixtures are the most ubiquitous site element on a campus and thus play a very significant role in creating a cohesive campus. Site lighting enhances the campus by day, especially when used to display banners. By night, campus lighting contributes to campus safety as well as campus character by highlighting significant elements within the campus landscape.

Included in This Section

Implementation

- All light fixtures shall conform to the Site Standards.
- Lighting shall meet the standards for college and university illumination set by IESNA. Ensure that a uniform lighting level exists throughout the campus to eliminate blind spots when going from bright to low lighting and that appropriate light levels are considered in the design.
- If an LED light fixture option is available it shall be brought to the Campus Planning and Design Committee for approval.
- If an equal is recommended, a written narrative shall be submitted to the Campus Planning and Design Committee - reference the Process portion of this document.
- All light fixtures shall follow the implementation methods noted herein. Facilities Services shall be notified of any replacement or removal of any light fixture. Facilities Services shall be notified of any new installation methods or materials and has authority on any technical aspects of the materials and implementation methods.
- In the event a light fixture is identified for replacement or removal, Facilities Services will facilitate this process - reference the Process portion of this document.
- All site standards shall be implemented beyond a 5' offset from any building. Any nonconforming site standard beyond this limit will require approval of the Campus Planning and Design Committee.
- All lighting located within city right-of-way shall comply with city standards.

3.1 DECORATIVE POLE LIGHTS

Application

Pedestrian pole lights shall be used in all pedestrian areas on campus. Banner arms and banners shall be provided on pole lights in designated areas. Banner arms shall not be used with windspeeds in excess of 80 mph. (See Site Signage - 4.12 BANNERS) Provide electrical outlets on poles in open lawn areas, plazas, and quadrangles.

Site Standard

Product: All aluminum, one-piece construction pole, with a tapered and fluted upper base design resting on a rounded lower base with induction light fixture, no cast frames or globe holders are permitted.

Manufacturer:	Antique Street Lamps or approved equivalent
Product Number Pole:	PX KW12 14 S4 FG-S ANBK (FG-S indicates GFCI in the base) PX KW20 16 S5 FG-S ANBK (16 foot pole option)
Fixture:	RGAL W 32LED 700MA 4K ARF R5 MVOLT FPF LS w/ BS1 BAND ANBK
Banner Arm:	BAC19 EBCD4 18 B 4 ANBK (for S4 pole, 2 arms per pole) BAC19 EBCD5 18 B 4 ANBK (for S5 pole, 2 arms per pole)
Mounting Arm:	PA15-1 CUSTOM (Single mounting arm w/ post cap) PA15-1A CUSTOM (Single mounting arm w/out post cap) PA15-2 CUSTOM (Double mounting arm w/ post cap)
Color:	Black Powder Coat finish
Contact:	(800) 410-8899
Website:	www.antiquestreetlamps.com

Application

Decorative street lights shall be used on all streets on campus expect Volunteer Bouelvard, Joe Johnson Drive, Lake Loudoun Boulevard, Phillip Fulmer Way Todd Helton Drive, Chamique Holdsclaw Drive and Stephenson Drive.

Banner arms and banners shall be provided on pole lights in designated areas. Banner arms shall not be used with windspeeds in excess of 80 mph. (See Site Signage - 4.12 BANNERS)

Site Standard

Product: All aluminum, one-piece construction pole, with a tapered and fluted upper base design resting on a rounded lower base with induction light fixture, no cast frames or globe holders are permitted.

Manufacturer:	Antique Street Lamps or KUB approved equivalent
Product Number Pole:	PX KW20 20 S4 FG-S ANBK (FG-S indicates GFCI in the base)
Fixture:	RGAL W 32LED 700MA 4K ARF R5 MVOLT FPF LS w/ BS1 BAND ANBK
Banner Arm:	BAC19 EBCD5 18 B 4 ANBK
Mounting Arm:	PA15-1 CUSTOM (Single mounting arm w/ post cap) PA15-1A CUSTOM (Single mounting arm w/out post cap)

	PA15-2 CUSTOM (Double mounting arm w/ post cap)
Contact:	(800) 410-8899
Website:	www.antiquestreetlamps.com

3.2 POLE ACCESSORIES

Application

Decorative pole light accessories extend university services into open campus space. Accessories allow extension of wi-fi communication services and provide additional points for mounting safety cameras.

Site Standard

Manufacturer:	ANP Lighting
Camera Bracket:	TBD
Wi-Fi Arm:	PA519-WAPBRKT-14
Extemder:	PA518-EXT-41

3.3 ROADWAY LIGHTS

Application

Roadway light fixtures shall be used on Volunteer Bouelvard, Joe Johnson Drive, Lake Loudoun Boulevard and Phillip Fulmer Way. Todd Helton Drive, Chamique Holdsclaw Drive and Stephenson Drive require the 25' pole. The 25' pole may be used in areas where the decorative street light may not be appropriate, such as service drives and streets that are adjacent to an industrial use.

Banner arms and banners shall be provided on roadway lighting in designated areas - see 4.12 BANNERS. Banner arms shall not be used with windspeeds in excess of 80 mph. When banner arms are not used, holes shall be drilled and plugged for potential future use.

Roadway lighting shall be approved by the City of Knoxville and shall be consistent with the City of Knoxville Standard.

All roadway lighting shall be approved by Knoxville Utility Board before installation. Roadway lighting wattage shall meet the photometric requirements for the street.

All roadway lighting shall require a KUB transformer base (Model number 70501) with handhole and black powdercoating.

Site Standard

Product:	LED lamp on aluminum pole
Manufacturer	
Pole & Bracket:	Lumec by Phillips or KUB approved equivalent
Fixture:	FSA Lighting or KUB approved equivalent
Product Number	
Pole:	ATR85V-32-BAS24(2)-VD-BKTX-LMS53982A
Base:	TB1-17-BKTX-LMS53982A
Bracket:	VC8-1A-R5-BKTX-LMS53982A (8' arm)
Fixture:	Large Viper L; VP-L/80NB-235/4K/T2/UNV/SF2/BBT
Banner Arm:	BAS24 (single, 24" x 1 1/16" o.d. steel tube with aluminum ball end cap, 2 arms per pole) BAD24 (double, 24" x 1 1/16" o.d. steel tube with aluminum ball end cap, 2 arms per pole)
Color:	Black powder coat finish
Pole & Bracket:	(865) 546-6735
Fixture:	(800) 345-4928
Website:	
Pole & Bracket:	www.lumec.com
Fixture:	www.beaconproducts.com

3.4 PARKING LOT LIGHTS

Application

Parking lot light fixtures shall be installed as a single, double, or four arm configuration as applicable to the area being illuminated. Poles shall withstand 80 mph windspeeds with four luminaires attached.

Site Standard

Manufacturer	
Pole:	HAPCO
Fixture:	Lithonia
Product Number	
Pole:	RSA30D6
Fixture:	KAD LED 60C 700 40K R4 MVOLT RPD 12 DBLXD
Color:	Black
Lamp Type:	LED
Contact:	(800) 279-8041
Website:	www.lithonia.com

3.5 TRAFFIC SIGNAL POLE AND MAST ARMS

Application

At vehicular intersections where traffic signalization is required on campus streets the following signal pole and accessories are to be used.

The use of these poles continues the aesthetic that clarifies and delineates that one is within the campus boundaries.

Site Standard

Product:	Traffic signal pole and arm
Manufacturer:	Valmont
Product Number:	UT Beautification Series 237657
Base:	3V04AC - Decorative clamshell
Finial:	32F Flame finial
Color:	Black
Compliance:	KUB, City of Knoxville, TDOT
Website:	www.valmont.com

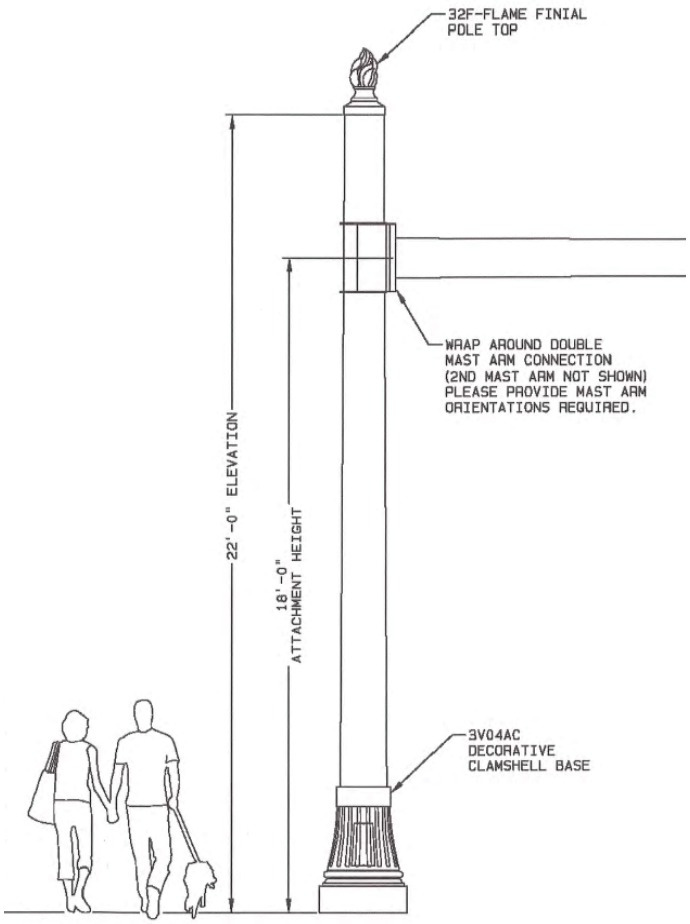

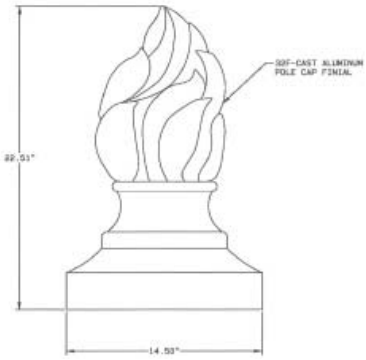

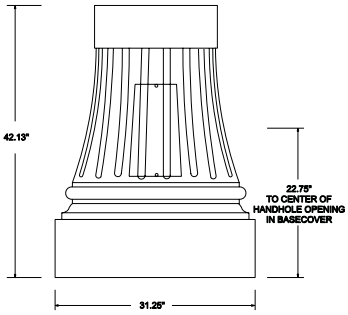

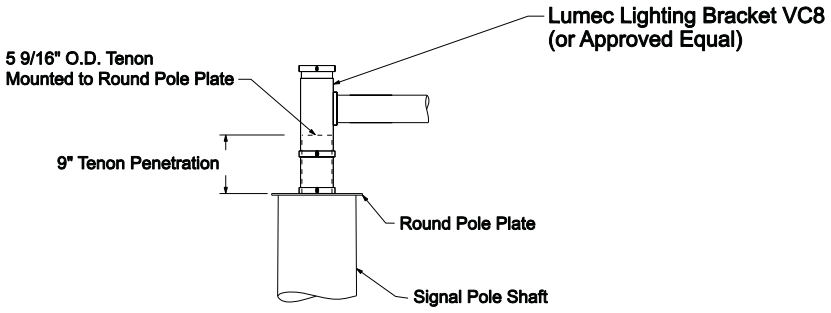

POLE TOP DETAIL

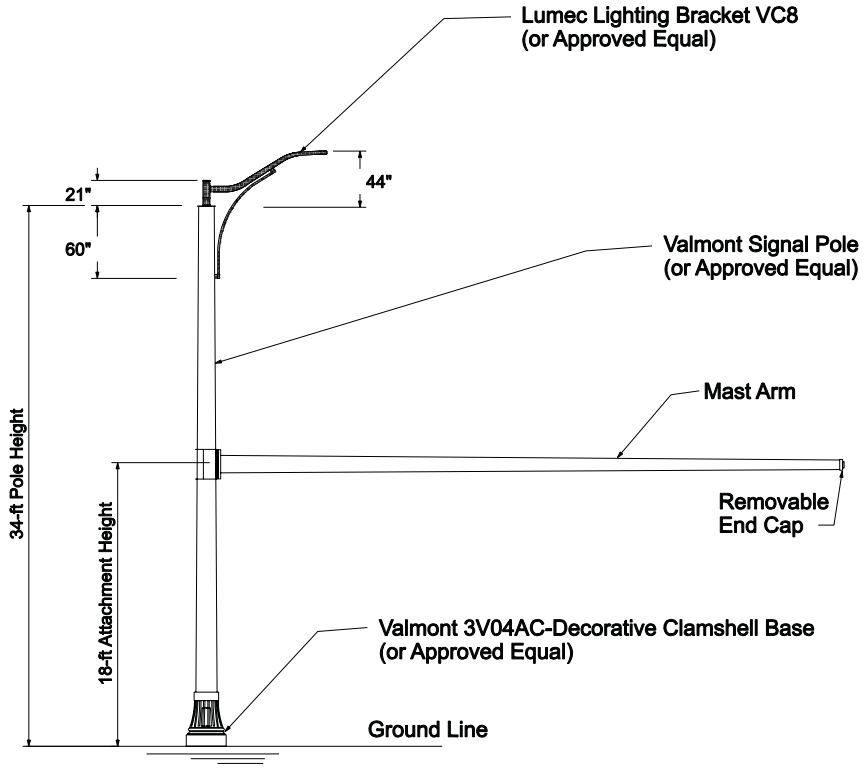

3.6 LIGHT BOLLARDS

Application

Light bollards are used where pole lighting is not appropriate. In general, reserve the use of the campus bollard only for unique situations as approved by the Campus Planning and Design Committee where the campus pedestrian fixture is inappropriate, recognizing that their tighter spacing can create a littered look in the landscape.

Site Standard

Product:	LED Light Bollard
Manufacturer:	Gardco Lighting or approved equivalent
Product Number:	BRM-836-36-DR-CNW-360-120-240-BLP
Color:	Black fade- and abrasion-resistant, electrostatic, thermally cured and textured polyester powder finish
Contact:	(800) 227-0758
Website:	www.sitelighting.com

Product:	LED Light Bollard
Manufacturer:	KIM Lighting
Product Number:	VRB1/20L5KUV/BL36”OAH
Color:	Black
Contact:	(626) 968-5666
Website:	www.kimlighting.com

3.7 IN-GRADE ARCHITECTURAL LIGHT FIXTURES

Application

In-grade light fixtures shall be used to accent campus features - uplighting walls, buildings, signs, sculpture, trees and plantings. Use and location to be approved by Facilities Services.

Site Standard

Product:	LED in-grade light fixture
Manufacturer:	Hydrel or approved equivalent
Product number:	M9410 A 12LED WHT53K MVOLT
Contact:	(866) 533-9901
Website:	www.hydrel.com

3.8 FLOOD LIGHTS

Application

Flood light fixtures shall be used for high impact accents of buildings, walls, signs, and sculptures. These fixture shall be integrated into the landscape so to not bring attention to the fixture.

Site Standard

Product:	Crosstour LED Floodlight
Manufacturer:	Lumark
Product Number:	XTOR3A-N
Color:	Carbon Bronze
Contact:	(713) 209-8400
Website:	www.cooperindustries.com

Site Standard

Product:	LED flood light
Manufacturer:	Gardco Lighting or approved equivalent
Product Number:	DFL7 LED
Color:	Textured Bronze
Contact:	(800) 227-0758
Website:	www.sitelighting.com

Application

Low-level flood light fixtures shall be used to provide light in pedestrian areas, walkways, and steps that are adjacent to site walls. Low-level flood lights shall have polycarbonate lenses to deter vandalism.

Site Standard

Product:	LED Low-level flood light
Manufacturer:	KIM Lighting or approved equivalent
Product Number:	LLF10P35/20L5KUV
Color:	Black - May vary by applications
Contact:	(626) 968-5666
Website:	www.kimlighting.com

3.9 RECESSED WALL LIGHTS

Application

Recessed wall lights shall be used to illuminate stairs, ramps, and other spaces where guidance is appropriate or a change in grade is present.

Site Standard

Product:	LED recessed wall light
Manufacturer:	Bega Lighting or approved equivalent
Product Number:	22 372 LED K4
Color:	Graphite
Contact:	(805) 684-0533
Website:	www.bega-us.com

Application

Step light fixtures shall be used to illuminate risers and provide safety. All step lights shall be located in adjacent cheek walls and shall not be set in steps.

Site Standard

Product:	LED recessed step light, Incandescent options available
Manufacturer:	FC Lighting or approved equivalent
Product Number:	FCSL105-120-LED-4K-BK-EC
Color:	Black
Contact:	(800) 900-1730
Website:	www.fclighting.com

3.10 BENCH LIGHTS

Application

All bench lights shall be located behind or below a wall reveal to be hidden from view.

Site Standard

Product:	LED bench light
Manufacturer:	IO Lighting or approved equivalent
Product Number:	0.10.E.3K.10.100.1.36.2.2
Contact:	(847) 777-3900
Website:	www.iolighting.com

3.11 LANTERNS FOR CAMPUS GATEWAYS

Application

Lanterns shall be embedded in campus gateway walls behind glass panels.

Site Standard

Product:	LED light
Manufacturer:	LSI Industires
Product Number:	XIG-B-LED-19-WW-208V-FL-NB
Contact:	(513) 793-3200
Website:	www.lsi-industries.com

INTRODUCTION

Site signage serves the important roles of pedestrian and vehicular wayfinding as well as the setting of campus character. While "You are here" signs are less necessary on campuses, due to the prevalence of online maps, every campus sign communicates the most overt "You are here" message of all site elements. It is critical therefore, that campus signage be sited consistently and respectfully, so that this message is as strong and positive as possible.

Any new signage shall be coordinated with Communications and Marketing as well as Facilities Services New signage shall be subject to the approval of the Campus Planning and Design Committee.

Included in This Section

4.1 Campus Gateways
4.2 Minor Site Columns
4.3 Pedestrian Directional Signs
4.4 Building Identification Signs
4.5 Parking Lot Identification Signs
4.6 Regulatory Signs
4.7 Street Signs
4.8 Banners
4.9 Temporary Signage Policy

Implementation

- Metal signage shall be powder coated with the standard UTK color palette.
- If an equal is recommended, a written narrative shall be submitted to the Campus Planning and Design Committee - reference the Process portion of this document.
- All signage shall follow the implementation methods noted herein. Facilities Services shall be notified replacement or removal of any signage. Facilities Services shall be notified of any new installation methods or materials and has authority on any technical aspects of the material and implementation methods.
- In the event a sign is identified for replacement or removal, Facilities Services will facilitate this process - reference the Process portion of this document.
- Regulatory signage shall comply with MUTCD standards.
- All site standards shall be implemented beyond a 5' offset from any building. Any nonconforming site standard beyond this limit will require approval of the Campus Planning and Design Committee.

4.1 CAMPUS GATEWAYS

Application

Wall and pilaster elements shall be utilized to identify the important portals into the academic campus and provide a sense of arrival. Primary campus entrance walls are located at:

- The intersection of Neyland Drive and Lake Loudoun Boulevard
- The intersection of Cumberland Avenue and Estabrook Road
- The intersection of Cumberland Avenue and Volunteer Boulevard West
- The intersection of Neyland Drive and Joe Johnson Drive
- The intersection of Kingston Pike and Neyland Drive (Sorority Village)

Campus gateways shall be constructed of consistent materials throughout campus - 'campus blend' brick with stone or precast caps and bases. Design of the walls shall match existing gateway detailing that emulate existing historical character and scale.

"The University of Tennessee" shall be incorporated on each wall element with inscribed lettering in pre-cast concrete or stone. Two sixteen foot pilasters shall be located on each end of the sign wall and contain internally illuminated lanterns.

Landscaping and seasonal color shall be incorporated into the gateway setting to further define these important markers.

Site Standard

Material:	Walls and pilasters of 'campus blend' brick with pre-cast cap and base
Pattern:	Alternate every other course between a running bond and a Flemish bond
Graphics:	"The University of Tennessee" and "EST. 1794" in the Goudy
Joints:	Buff mortar with yellow sand
Caulking:	Vertical expansion joint calking - "Sika Red #2CNS 75762"
	Horizontal joints in brick to match mortar - "Sika Tan"
	Limestone joints - "Sika Pearl Ash"
Lantern:	See 3.11 LANTERNS FOR CAMPUS GATEWAYS

4.2 MINOR SITE COLUMNS

Application

Minor site columns shall be used to announce secondary and tertiary campus thresholds. They can be used within the campus as a terminus to a wall or a standalone feature. Locations shall be approved by the Campus Planning and Design Committee.

Minor site columns shall be constructed of consistent materials throughout campus - 'campus blend' brick with stone or precast caps and bases. Design of the columns shall match existing gateway detailing that emulate existing historical character and scale. Minor site columns can be found flanking the entrances to Franternity Park.

If used as a gateway marker, the University identification shall be considered for incorporation through an inset pre-cast concrete or stone panel on the face of the column.

Landscaping and seasonal color shall be incorporated into the setting of the column to further define the marker.

Site Standard

Material:	Walls and pilasters of 'campus blend' brick with pre-cast cap and base
Pattern:	Alternate every other course between a running bond and a Flemish bond
Graphics:	Per UTK standards
Joints:	Buff mortar with yellow sand
Caulking:	Vertical expansion joint calking - "Sika Red #2CNS 75762"
	Horizontal joints in brick to match mortar - "Sika Tan"
	Limestone joints - "Sika Pearl Ash"
Size:	Column shall be square with dimensions determined by space constraints. Height shall be appropriate for the horizontal dimensions.

4.3 PEDESTRIAN DIRECTIONAL & INTERPRETIVE SIGNS

Application

Pedestrian directional signs shall be installed at points in the campus that have been identified as critical points for wayfinding.

Site Standard

Product:	Double-sided aluminum sign panels secured with #8-32 tamper resistant screws with fluted posts on concrete foundation.
Manufacturer:	Image Manufacturing Group
Product Number:	PDI
Contact:	(678)580-3281
Website:	www.imgarchitectural.com

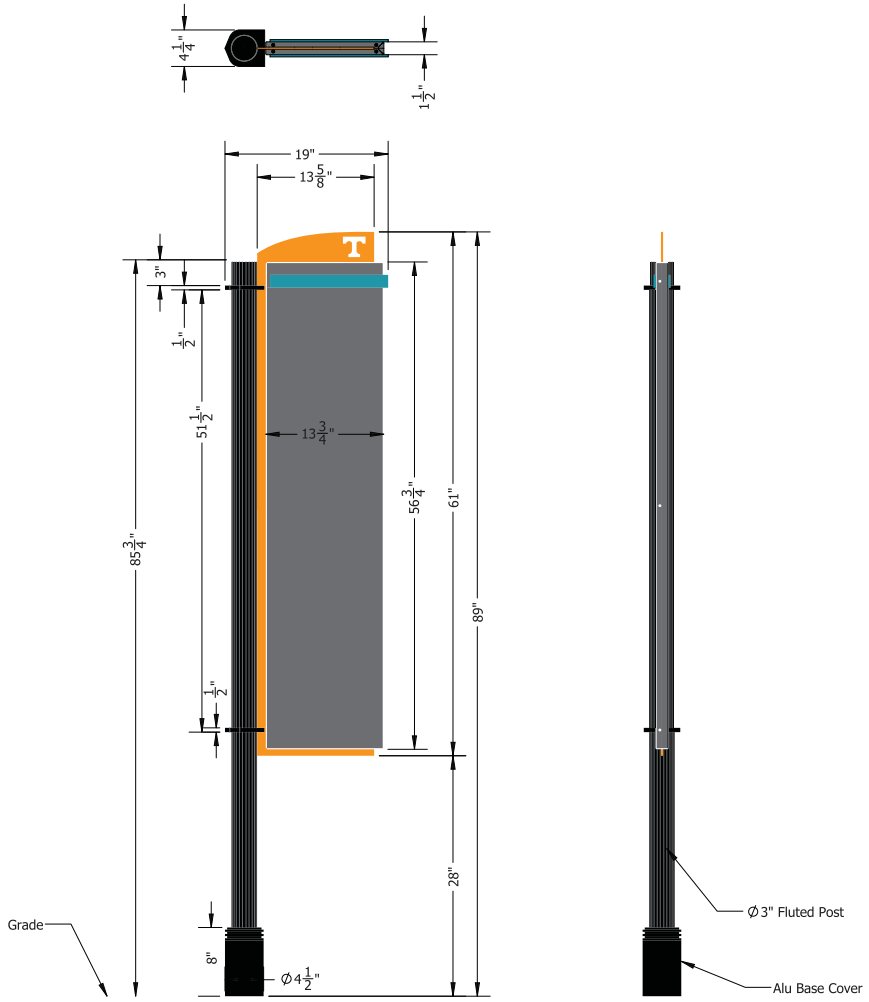

4.4 BUILDING IDENTIFICATION SIGNS

Application

As the most common sign on campus, building identification signs shall serve to set the campus character as well as identify buildings for wayfinding. Ensure that building identification signs are set within an adequately-sized space. Install signs with a standard relationship to streets and walkways. Concrete footings are to be round and the exposed portions are to be painted black.

Site Standard

Product:	Double-sided aluminum sign panels secured with #8-32 tamper resistant screws with fluted posts on concrete foundation.
Manufacturer:	Image Manufacturing Group
Product Number:	LBF
Contact:	(678)580-3281
Website:	www.imgarchitectural.com

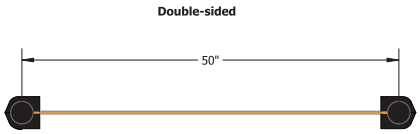

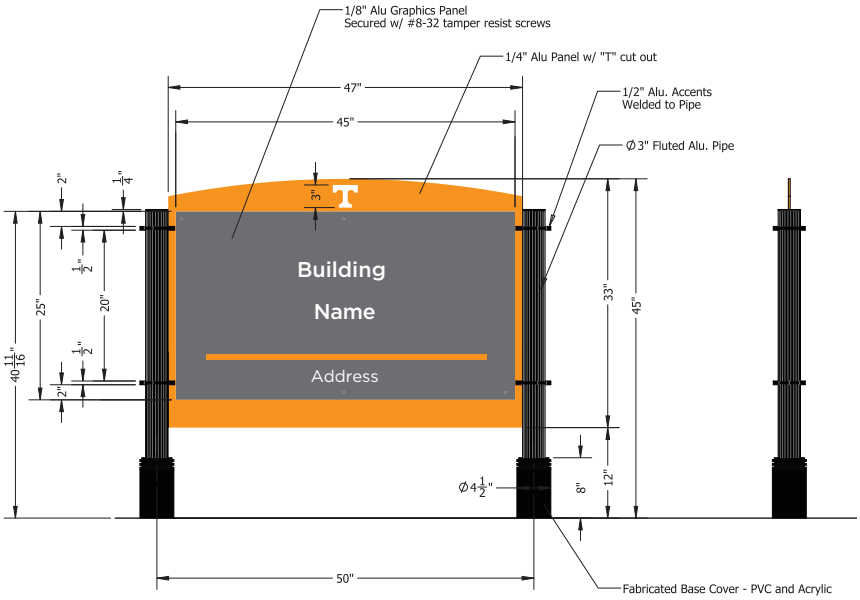

4.5 PARKING LOT IDENTIFICATION SIGNS

Application

Parking lot identification signs shall be installed at the entry to parking areas.

Site Standard

Product:	Double-sided aluminum sign panels secured with #8-32 tamper resistant screws with fluted posts on concrete foundation.
Manufacturer:	Image Manufacturing Group
Product Number:	SBF
Contact:	(678)580-3281
Website:	www.imgarchitectural.com

Application

Parking space identification signs shall comply with Parking Services standards.

Site Standard

Product:	Black steel u-channel or square post with aluminum sign blade
Mounting hardware:	Galvanized or stainless steel
Compliance:	Parking Services graphic conventions

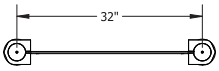

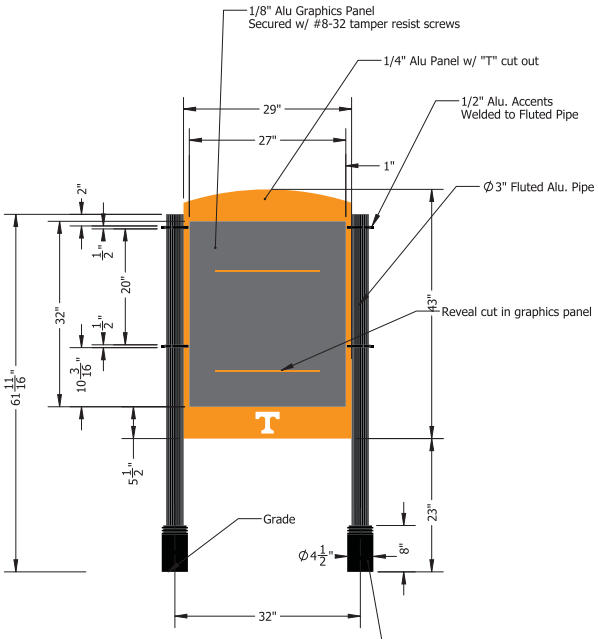

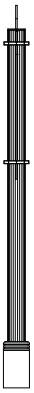

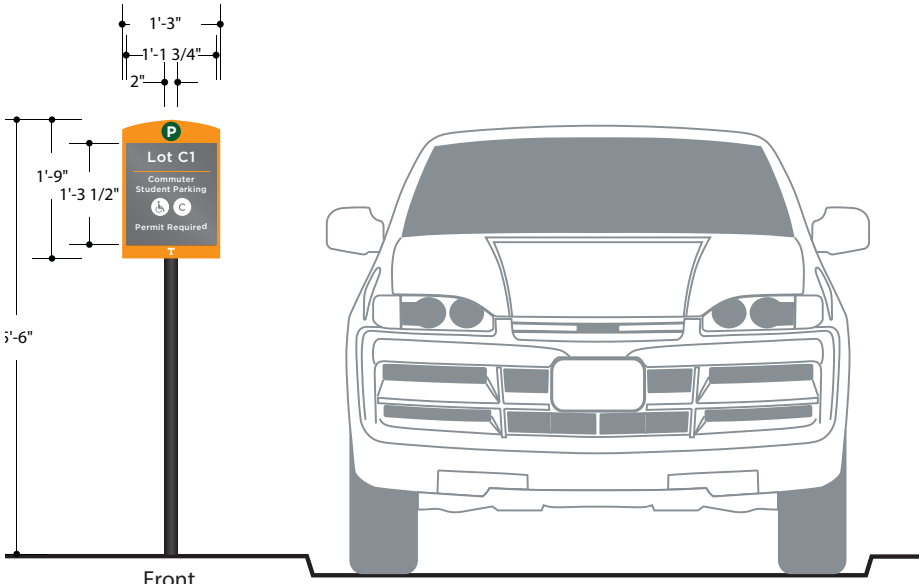

4.6 REGULATORY SIGNS

Application

Regulatory signs shall be installed per MUTCD and City of Knoxville standards.

Site Standard

Product:	Black steel u-channel or square post with aluminum sign blade
Manufacturer:	Per City of Knoxville Technical Specifications for Signage
Mounting hardware:	Galvanized or stainless steel
Color:	Sign blade back to be black
Compliance:	Face graphics to conform to MUTCD standards

4.7 STREET SIGNS

Application

Street signs shall be installed per MUTCD and City of Knoxville standards.

Site Standard

Product:	Aluminum sign panels in UTK color palette.
Manufacturer:	Image Manufacturing Group
Product Number:	SBF
Contact:	(678)580-3281
Website:	www.imgarchitectural.com
Compliance:	Face graphics to conform to MUTCD standards

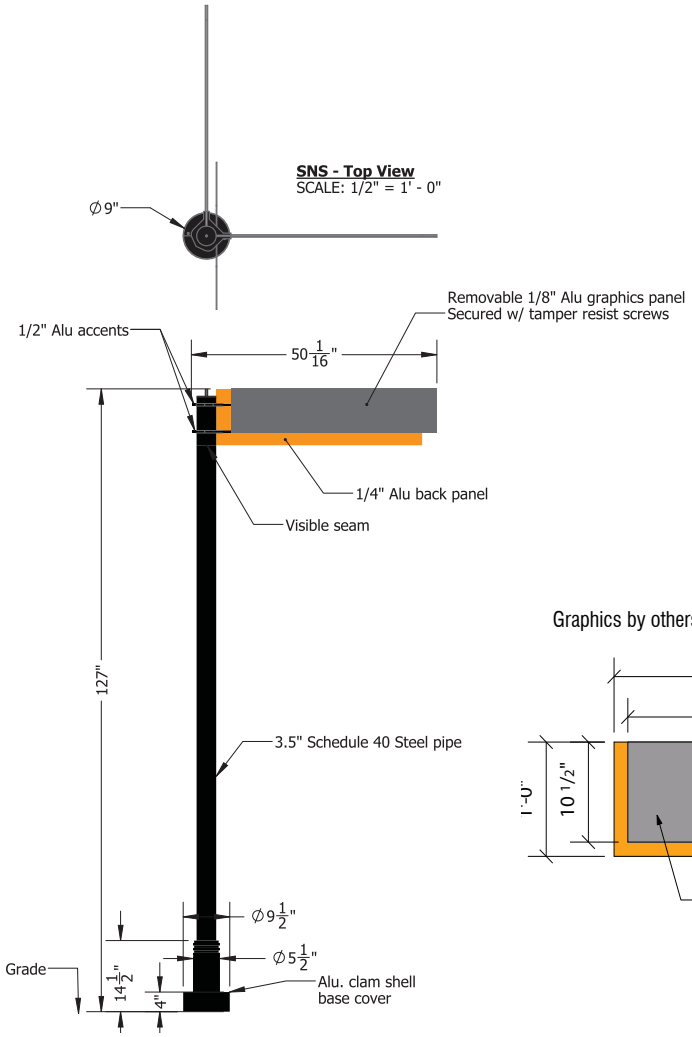

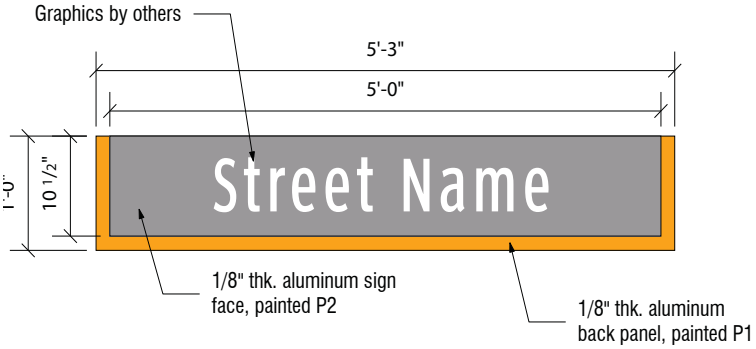

4.8 BANNERS

Application

Banners shall be used to communicate campus messages and special events. Banner sizes shall correspond to the light standard to which they are mounted.

Site Standard

Pedestrian Pole Light and Decorative Street Light Banner

Size:	18" x 72"
Mounting:	See 3.1 PEDESTRIAN POLE LIGHTS and 3.2 DECORATIVE STREET LIGHTS
Location:	Primary locations are Circle Park, the Pedestrian Mall, The Hill, and Volunteer Blvb.*

Roadway Light Banner

Size:	24" x 120"
Mounting:	See 3.3 ROADWAY LIGHTS
Location:	Primary locations are Gate 21, Visitors Center and the entrance to The Hill. Future locations will Volunteer Boulevard, Lake Loudoun Boulevard and Phillip Fulmer Way.*

**(At the time of issuance of this document the University is in the process of identifying locations and time frames for campus banners. Coordination with the Office of Communications and Marketing will be necessary to ensure compliance with the policy.)*

Banner Procedure

University groups or organizations wishing to hang banners from light poles on the campus of the University of Tennessee, Knoxville, must submit a request three weeks before the desired date when the banners should be displayed. The request should include the number of banners to be displayed, the desired locations, the design of the banners, and the beginning and ending dates for the display.

Banners must be approved by the Office of Communications and Marketing. Banners must be in good taste, abide by UT graphic identity standards, and may not contain commercial content. If requested, Communications and Marketing may design the banners. If this service is required, a project request form must be submitted. Allow at least three additional weeks for design and printing.

Only recognized campus organizations and departments may display banners. Banners will only be displayed for a predetermined, limited time. The exact dates when banners are put up and taken down will be impacted by the availability of appropriate staff from Facilities Services.

There will be a fee charged by Facilities Services for putting up and taking down the banners. The organization wishing to hang banners is responsible for all costs associated with producing and hanging the banners.

Contact Communications and Marketing for additional information.
http://communications.utk.edu/

4.9 TEMPORARY SIGNAGE POLICY

Application

Temporary signs can be used to communicate campus messages and special events but are to removed once event or promotion has concluded.

Site Standard

Temporary signage includes, but is not limited to:

Banners and signs (made of vinyl, or any other material)
Yard signs (political type mounted on wire frames)
Sandwich boards
A-frames, bow banners
Feather flags
Sidewalk stickers
Pennant streamers
Pennant flags

Temporary Signage Guidelines and Procedure

See Temporary Signage Policy issued by Facilities Services and The Office of Communications and Marketing for details.

INTRODUCTION

Planting completes the framework for campus open space initiated by the architecture, thus giving campus spaces an essential third dimension or "ceiling". Plantings create enclosure where building faces are inadequate or missing, provide comfortable transitions between human-scaled spaces and tall campus buildings, frame and screen views, and reinforce corridors. In general, given the scale and interconnectedness of campus spaces, the planting palette for any given space should be a simple one so that the perception of the space is not overwhelmed by the particulars of the planting. Broad swaths of a few species are the most effective approach to planting for most campus spaces, and reflect an appropriate maintenance commitment for a campus. The successful maintenance of plantings and their long-term survival is greatly determined by the planting soils that support their growth.

Included in This Section

Implementation

- All plant material installed on campus shall comply with the American Nursery and Landscape Association (ANLA) requirements.
- The "Invasive Plants of Tennessee" document from Tennessee Exotic Pest Plant Council shall be consulted to ensure that all new plant species are not listed.
- Native plant species shall be considered for all planting applications on campus for the environmental benefits that they provide.
- Products shall follow manufacturer's recommendations for installation and/or mounting. Facilities Services shall be notified of any new installation, replacement or removal of any plantings. Facilities Services has authority on any technical aspects of the planting and installation.
- Refer to the KUB website for 'Plant Smart' - a reference to minimize the issues related to overhead utilities.
- All site standards shall be implemented beyond a 5' offset from any building. Any nonconforming site standard beyond this limit will require approval of the Campus Planning and Design Committee.
- All planting and associated materials located within the city right-of-way shall comply with city standards.
- For additional guidelines for planting, see the Guidelines for Principle Four: Campus Planting, in the Campus Landscape Vision.

5.1 LARGE DECIDUOUS CANOPY TREES

Application

Large deciduous canopy trees shall be planted to define and shape campus spaces. Canopy trees provide both edges and ceilings for "outdoor rooms" while maintaining an openness at eye level. This quality is critical to campus safety and is in keeping with CPTED guidelines for collegiate campuses.

Large deciduous canopy trees shall be planted to provide shaded pedestrian walkways and spaces, providing comfort for the campus community and environmental benefits through reducing heat islands.

Site Standard

Size: Large deciduous canopy trees shall be installed at 3 in. cal. min, with a trunk free of branches to 7 to 8 ft.

Form: Species characterized by a central leader shall have a strong, unforked, central leader. Columnar cultivars shall be used judiciously. Due to the limited space-making qualities of columnar trees, they should only be used where space is limited and cannot be enlarged to provide an appropriately-sized space for a large canopy tree.

Health: All trees shall be healthy, vigorous, and well rooted. Root balls and containment shall meet the standards of the ANLA. The root system of container grown trees shall be well established in the container in which they are growing, reaching, but not encircling, the sides of the container.

Seasonal Interest: Consideration for seasonal interest that falls within the academic calendar shall be a priority – species with autumn color, winter bark, and spring bloom being favored over those with summer bloom. Favor species whose seasonal interest coincides with important events in the life of the University. Depending upon the location on campus, special consideration may be given to orange fall color.

Maintenance: Species shall be long-lived. The maintenance implications of the fruits of selected species shall be considered, especially when planted near expanses of pedestrian pavement.

Native Species: Native species shall be given consideration over non-native species in order to create a campus landscape that feels appropriate to eastern Tennessee and appears to be indigenous. This is especially important for naturalized planting areas. For more formally planted areas, a wider variety of species may be considered to support the plant sciences program.

Invasive Species: The "Invasive Plants of Tennessee" document from Tennessee Exotic Pest Plant Council shall be consulted to ensure that all new plant species are not listed.

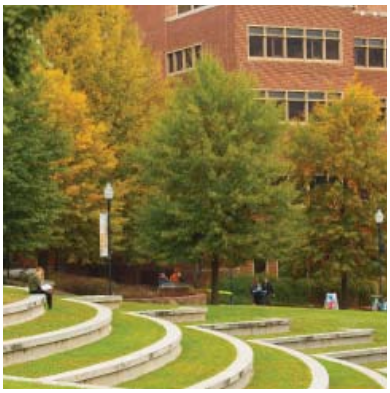

5.2 STREET TREES

Application

Campus roadways, though potentially antithetical to the creation of a campus pedestrian environment, often provide visitors with their initial views of the campus; street trees shall be planted on both sides of campus streets to provide a positive first impression of the University, integrate the roadways into the campus landscape, and provide a comfortable pedestrian zone at their edges.

Campus street trees shall contribute to a cohesive landscape for the University through the adherence to the UTK Streetscape Master Plan.

Site Standard

Size: Street trees shall be installed at 3 in. cal. min, with a trunk free of branches to 7 to 8 ft to minimize the potential conflict of vehicles and branches.

Form: Species characterized by a central leader shall have a strong, unforked, central leader.

Health: All trees shall be healthy, vigorous, and well rooted. Root balls and containment shall meet the standards of the ANLA. The root system of container grown trees shall be well established in the container in which they are growing, reaching, but not encircling, the sides of the container.

Invasive Species: The "Invasive Plants of Tennessee" document from Tennessee Exotic Pest Plant Council shall be consulted to ensure that all new plant species are not currently listed.

Selected Species: Species shall adhere to the UTK Streetscape Master Plan, based upon the 2006 Streetscape Master Plan and Lake Loudoun Boulevard Design document from December 2012, with the modifications necessitated by climate change indicated by asterisks below. The species selected for each of the campus roadways are:

- Neyland Drive – Zelkova
- Joe Johnson Drive – Nuttall Oak & Autumn Blaze Maple*
- Andy Holt Avenue & Pat Head Summit Drive – Nuttall Oak
- Volunteer Boulevard, Phillip Fulmer Way (adjacent to Thompson Boling Arena) & Peyton Manning Pass – Willow Oak
- Phillip Fulmer Way (from Thompson Boling Arena to Andy Holt Avenue) – Autumn Blaze Maple*
- Phillip Fulmer Way (between Cumberland Avenue & Andy Holt Avenue) – Red Maple
- Joe Johnson & John Ward Pedestrian Mall – Willow Oak & Autumn Blaze Maple*
- UT Drive – Red Maple
- Fraternity Drive – Zelkova
- Johnny Majors Drive & Fraternity Park Drive SW – Allee Elm
- Lake Loudoun Boulevard & Lake Loudoun Boulevard Campus Entry along Neyland Drive – Autumn Blaze Maple*
- Todd Helton Drive & Chamique Holdsclaw Drive – Crape Myrtle
- Caledonia Avenue – Autumn Blaze Maple

5.2 STREET TREES (cont'd)

The desire for cohesiveness along campus streets must be weighed against the correlation of monocultures and extensive loss of trees due to pest outbreaks. Frank Santamour's formula provides the current wisdom for protecting urban forests from pest outbreaks through increasing species diversity. The formula states that for maximum protection, the urban forest should contain no more than 10% of any single tree species, no more than 20% of any tree genus, and no more than 30% of any tree family. As the calculation of these numbers is beyond the scope of these standards, the following additions, selected from the City of Knoxville 2002 Street Tree Master Plan, to the recommended tree species of the UTK Streetscape Master Plan are proposed; these trees should be interspersed with the above recommended species along campus streets to increase the diversity of trees within the city and the university.

American Basswood

American Heritage Elm

Chestnut Oak

Northern Red Oak

Sawtooth Oak

Shumard Oak

Tulip Poplar

White Basswood

5.3 EVERGREEN TREES

Application

Evergreen trees should be used within the campus landscape to frame and direct desired views, help define campus spaces lacking architectural edges, provide winter interest in larger campus spaces, and provide protection from winter winds. Evergreen trees should also be used as a screen for undesirable views and utilities. When used for screening, integrate evergreen trees into the adjacent planting masses, to ensure that the plantings do not call increased attention to the area to be screened through the rigid spacing of an atypical species.

Mature evergreen trees are generally less successful in creating a "ceiling" for a space, and in their youth, their low branching is space-breaking rather than space-making; therefore, their use in all but the largest campus spaces is not recommended.

Site Standard

Size: Evergreen trees shall be installed at a minimum height of 8' and shall be branched to the ground. They shall have a uniform shape.

Form: Self-pruning species shall not be used in locations where screening is desired. Self-pruning species may be selected for planting for winter interest within large spaces, located away from major pedestrian connections.

Health: All trees shall be healthy, vigorous, and well rooted. Root balls and containment shall meet the standards of the ANLA. The root system of container grown trees shall be well established in the container in which they are growing, reaching, but not encircling, the sides of the container.

Maintenance: Species shall be long-lived.

Native Species: Native species shall be given consideration over non-native species in order to create a campus landscape that feels appropriate to eastern Tennessee and appears to be indigenous. This is especially important for naturalized planting areas. For more formally planted areas, a wider variety of species should be considered to support the plant sciences program.

Invasive Species: The "Invasive Plants of Tennessee" document from Tennessee Exotic Pest Plant Council shall be consulted to ensure that all new plant species are not listed.

5.4 FLOWERING AND SMALLER TREES

Application

Flowering and small-scale trees shall be used judiciously on campus as their lower branching height restricts sight lines and breaks, rather than creates, all but the smallest campus spaces.

Flowering trees have value in campus landscape through the intimate scale within their canopies and the seasonal interest they provide; for this reason, they shall be used to help shape small campus spaces, to bring seasonal color to building entries, especially residential buildings, and as foreground plantings for buildings where foundation plantings are not needed or are inadequate for the scale of the building.

Site Standard

Size: Flowering trees shall be installed at a minimum of 2 in. cal. min.

Seasonal Interest: Consideration for seasonal interest that falls within the academic calendar shall be a priority – species with autumn color, winter bark, and spring bloom being favored over those with summer bloom. Favor species whose seasonal interest coincides with important events in the life of the University. Depending upon the location on campus, special consideration may be given to orange fall color.

Health: All trees shall be healthy, vigorous, and well rooted. Root balls and containment shall meet the standards of the ANLA. The root system of container grown trees shall be well established in the container in which they are growing, reaching, but not encircling, the sides of the container.

Maintenance: Species shall be long-lived.

Native Species: Native species shall be given consideration over non-native species in order to create a campus landscape that feels appropriate to eastern Tennessee and appears to be indigenous. This is especially important for naturalized planting areas. For more formally planted areas, a wider variety of species should be considered to support the plant sciences program.

Invasive Species: The "Invasive Plants of Tennessee" document from Tennessee Exotic Pest Plant Council shall be consulted to ensure that all new plant species are not listed.

5.5 SHRUBS

Application

Shrub masses shall be used on campus to help shape and define campus spaces, to define and enhance campus and building entries, and to screen or minimize detracting elements in the landscape.

Shrub plantings shall be used judiciously on campus due to the added maintenance that they require and their potential to subdivide spaces and interrupt sightlines. Foundation plantings should be used judiciously, only where the base of the building is unsightly, and the planting of shrubs will be in scale with the building.

Shrub plantings shall contribute to campus coherence - ensure that large spaces are treated simply and that plantings reflect the speed at which they are viewed. Plant beds are typically the most successful when limited to a few species used in large masses or drifts, except when the beds border campus gathering areas where the plant materials are viewed from a short distance and over a longer time period.

Shrub plantings shall support the navigation of campus and lend a clarity and comfortable rationality to the campus. Building entrances should be the primary focus of campus spaces; therefore, plant shrubs at entry spaces to support but not compete with the architectural definition of a building's entrance.

Site Standard

Size: Shrubs shall be installed at a minimum size of 3 gal. or equivalent if balled and burlapped.

Form: Shrub species shall be selected to ensure that their ultimate height will not subdivide campus spaces inappropriately and violate CPTED guidelines. Shrub species selected for screening shall have proper density and form to minimize unwanted views.

Health: All shrubs shall be healthy, vigorous, and well rooted. Root balls and containment shall meet the standards of the ANLA. The root system of container grown shrubs shall be well established in the container in which they are growing, reaching, but not encircling, the sides of the container.

Seasonal Interest: Consideration for seasonal interest that falls within the academic calendar shall be a priority – species with autumn color and spring bloom being favored over those with summer bloom. Favor species whose seasonal interest coincides with important events in the life of the University. Depending upon the location on campus, special consideration may be given to orange fall color. Incorporate evergreen shrub plantings for winter interest in the campus landscape.

Maintenance: Shrub species shall be selected to fit the desired space without requiring periodic pruning – a maintenance burden for the Facilities staff, which typically results in an architectural and more prominent presence for plant materials that would be best left naturalistic and as a backdrop for campus spaces.

Native Species: Native species shall be given consideration over non-native species in order to create a campus landscape that feels appropriate to eastern Tennessee and appears to be indigenous. This is especially important for naturalized planting areas. For more formally planted areas, a wider variety of species should be considered to support the plant sciences program.

Invasive Species: The "Invasive Plants of Tennessee" document from Tennessee Exotic Pest Plant Council shall be consulted to ensure that all new plant species are not listed.

5.6 GROUNDCOVERS AND PERENNIALS

Application

Groundcovers and large perennial beds, despite the added maintenance that they require, contribute to the campus by providing vegetated cover in difficult areas – steep slopes that exceed 3:1 (33%) where the use of lawn mower is impractical or unsafe; areas that need to be kept open without shrub planting but are too small and isolated rendering mowing inefficient or impractical; or shady locations where lawn cannot be established.

Site Standard

Size: Groundcovers and perennials shall be installed at a minimum 2 ½ in. container size.

Health: All plants shall be healthy, vigorous, and well rooted and shall meet the standards of the ANLA. The root system of plants shall be well established in the container in which they are growing, reaching, but not encircling, the sides of the container.

Seasonal Interest: Consideration for seasonal interest that falls within the academic calendar shall be a priority – species with spring bloom being favored over those with summer bloom. Favor species whose seasonal interest coincides with important events in the life of the University.

Maintenance: Plants should be planted in staggered rows, spaced to promote coverage of the plant bed in X years. Select species that reflect the current light conditions, not the light conditions anticipated in the future with the ultimate growth of a tree canopy.

Native Species: Native species shall be given consideration over non-native species in order to create a campus landscape that feels appropriate to eastern Tennessee and appears to be indigenous. This is especially important for naturalized planting areas. For more formally planted areas, a wider variety of species should be considered to support the plant sciences program.

Invasive Species: The "Invasive Plants of Tennessee" document from Tennessee Exotic Pest Plant Council shall be consulted to ensure that all new plant species are not listed.

5.7 LAWNS

Application

The primary cover of the campus ground plane shall be lawn, which will serve as the unifying landscape element across campus. Efforts shall be made to re-seed or re-sod as necessary to achieve a strong lawn and reinforce this desirable campus image; sod is the recommended lawn installation method due to the intensive use of the campus environment.

However, given that the maintenance of campus lawns presents a challenge to sustainable landscape practices, consideration should be given to the replanting of areas that are not central to the life or image of the University, but which need to be kept open, with a meadow of native orange and white flowers and grass species that maintain a lower height with only semi-annual mowing and recall the landscape heritage of the University.

Site Standard

Seed Type: Seed shall be an improved cultivar blend that is drought tolerant and disease resistant of Tall Turf Type Fescue and Heat Tolerant Bluegrass; seed shall be sod-quality seed

5.7 LAWNS (cont'd)

Seeding Times:
Permanent Seeding – between March 15th and May 1st or between August 15th and October 15th

Temporary Winter Seeding – between October 15th and March 15th

Temporary Summer Seeding – between May 1st and August 15th

Sod Type: An improved cultivar blend that is drought tolerant and disease resistant of Tall Turf Type Fescue and Heat Tolerant Bluegrass with 1/2" - 3/4" of soil when cut; sod shall be from a local supplier to ensure that appropriate seed mix is used.

Sodding Time: Installation of an approved nursery grown sod is recommended from March to December but can be planted year round if regularly irrigated.

5.8 NATIVE GRASSES AND FLOWERS

Application

Given that the maintenance of campus lawns presents a challenge to sustainable landscape practices, consideration should be given to the replanting of areas that are not central to the life or image of the University, but which need to be kept open, with a meadow of native orange and white flowers and native grass species that maintain a lower height with only semi-annual mowing and recall the landscape heritage of the University.

Test plots are encouraged to determine species and develop a protocol for planting and maintenance that will ensure that the addition of native grasses and flowers to the campus landscape produces the desired appearance and reduces the required maintenance for the area. Development of a palette for hard to maintain slopes and a palette for a more formal appearance can potentially expand the use of these plants within the campus.

Site Standard

Size: Perennials shall be installed at a minimum 2 ½ in. container size.

Health: All plants shall be healthy, vigorous, and well rooted and shall meet the standards of the ANLA. The root system of plants shall be well established in the container in which they are growing, reaching, but not encircling, the sides of the container.

Seasonal Interest: Consideration for seasonal interest that falls within the academic calendar shall be a priority – species with spring bloom being favored over those with summer bloom. Favor species whose seasonal interest coincides with important events in the life of the University.

Maintenance: Plants should be planted in staggered rows, spaced to promote coverage of the plant bed in X years. Select species that reflect the current light conditions, not the light conditions anticipated in the future with the ultimate growth of a tree canopy.

Native Species: Native species shall be given consideration over non-native species in order to create a campus landscape that feels appropriate to eastern Tennessee and appears to be indigenous. This is especially important for naturalized planting areas.

Invasive Species: The "Invasive Plants of Tennessee" document from Tennessee Exotic Pest Plant Council shall be consulted to ensure that all new plant species are not listed.

5.9 SEASONAL COLOR BEDS

Application

Due to the high maintenance costs of seasonal color beds, their use shall be limited to campus gateways and selected building entries and gathering spaces.

Site Standard

Seasonal Interest: The planting of seasonal color beds shall be rotated two times per year:

Late spring / early summer planting shall include summer annuals such as begonias, marigolds, lantana, and impatiens.

Fall planting shall include the installation of winter pansies and spring blooming tulips.

5.10 PARKING LOT PLANTINGS

Application

Parking lots shall be planted to minimize their impact on the visual quality of the campus and comply with City standards. Evergreen shrub masses shall be planted at the perimeter of parking lots to provide a visual buffer without obscuring sight lines. Planting islands within the lot shall be planted with large canopy deciduous trees with to provide shade and heat reduction.

Site Standard

Form: Shrub species for the edge of parking areas shall be selected to ensure that they will not exceed 30" in height above the crown of the adjacent parking aisle to maintain sight lines and adhere to CPTED Design Guidelines. Deciduous canopy trees, which will grow to a minimum height of thirty feet and crown spread of no less than one-half the height of maturity, shall be selected for planting in planting islands at the rate of one tree for each five thousand square feet of parking lot area.

Health: All plants shall be healthy, vigorous, and well rooted and shall meet the standards of the ANLA. The root system of plants shall be well established in the container in which they are growing, reaching, but not encircling, the sides of the container.

Maintenance: All planting islands shall be bordered by a 6" high curb or wheel stop to protect trees and plant material. Provide a minimum of 400 SF per planting island to support the planting of a tree, and excavate to ensure that a good growing medium is provided to a depth of 24" to achieve a minimum volume of 800 CF per tree. Use of structural soil, structures, or suspended pavement may be needed to achieve this volume and support the growth of mature trees. (See 5.17 STRUCTURAL CELLS)

Native Species: Native species shall be given consideration over non-native species in order to create a campus landscape that feels appropriate to eastern Tennessee and appears to be indigenous.

Invasive Species: The "Invasive Plants of Tennessee" document from Tennessee Exotic Pest Plant Council shall be consulted to ensure that all new plant species are not listed.

5.11 SOILS AND AMENDMENTS

Application

Proper soil preparation and amendment shall be provided with all new plantings to provide a foundation for successful plant growth. Sieve, chemical, and nutrient analysis of the soils shall be required prior to planting to determine the amendments necessary to produce a good growing medium for the plantings.

Site Standard

Minimum Soil Volume: 1,200 CF per tree (note that this volume is reduced within parking areas); 18 in. continuous bed depth for all shrub beds; 12 in. continuous bed depth for perennial and annual beds; and 8 in. depth for turf areas.

Organic Content: Soil tests shall be completed to assess the quality of soil of existing and imported soil. Soil content shall include 3-5% organic matter for lawns and 4-6% organic matter for planting beds and trees. Compost can be obtained from the UT Composting Facility. Contact local suppliers regarding soil amendments.

Bed preparation: In heavy clay-based subsoils, the interface between planting soil and subsoil shall slope a minimum of 2%, or provide perforated drainage tile to wick water away from deep plant beds.

5.12 METAL BED EDGING

Application

Metal edging shall be the only edging material allowed on campus. Metal edging should extend 1 - 1.5" above top of sod or finish grade.

Site Standard

Manufacturer: Collier Metal Specialties or approved equivalent

Product Number: 1012-6, 10' x 12 ga Commercial Edging

Finish: Black Powder Coat finish

Contact: (865) 546-9608

Website: www.colmet.com

5.13 MULCH

Application

Mulch shall be installed with all new tree and shrub bed plantings. Hardwood mulch shall be installed at level and gently sloping beds. Hardwood mulch shall be used in planting beds adjacent to pedestrian pathways and formal planting areas. Pine straw mulched shall be used on steep slopes and naturalized areas.

Site Standard - Hardwood Mulch

Material: Triple Ground Hardwood Mulch, undyed and free of weeds, grasses and other debris. Mulch shall be aged one year before use to create a preferred C:N ratio.

Bed Size and Depth: Mulch depth for plant bed shall be no more than 3 in. The addition of new mulch shall not increase this depth; if necessary mulch can be turned to provide a fresh appearance. Tree rings shall be given a 3 in. depth of

mulch above finish grade and shall have a 6 in. high saucer at the dripline. Mulch shall not be within 4 in. of tree trunk.

Site Standard - Pine Straw

Material: Pine Straw shall be fresh, bearing a bright brown color and free of weeds, grasses or other debris. It shall not be brittle, dry or faded.

5.15 PLACED BOULDERS

Application

Placed boulders may be placed as design features in the landscape for accent. Boulders shall be placed in groupings to mimic natural features.

Site Standard

Material: Boulders shall be native stone. Boulder size may vary depending upon the design intent; however, the size of the boulders shall be of an appropriate scale for the application.
Color: Color shall be in the brown, buff and beige earth tones.
Installation: Boulders shall be typically buried to a depth of 1/3 the height of the stone to more closely mimic the setting of rock outcroppings in nature.

5.17 STRUCTURAL CELLS

Application

Structural cells shall be used as a modular suspended pavement system to hold large volumes of soil while supporting pedestrian and vehicular traffic loads. The soil stored within each structural cell shall serve to facilitate stormwater infiltration, promote healthy tree growth and deter damage to site paving that can create unsafe travel for pedestrians.

Site Standard

Product:	Silva Cell suspended pavement system
Manufacturer:	DeepRoot or approved equivalent
Dimensions:	16”H x 24”W x 48”L
Contact:	800-458-7668
Website:	www.deeproot.com

5.18 PEST MANAGEMENT AND PLANT PATHOLOGY

Application

Pests shall be controlled through the use of an Integrated Pest Management (IPM) approach. A thorough review of the issue and of alternate methods of treatment shall be undertaken prior to the use of chemicals to control weeds and pests.

Site Standard

Application: All herbicides and pesticides shall be applied per manufacturer’s recommendations.

5.19 PLANTING DETAILS

Application

Spacing for planting shall consider the mature growth of plant material and the acceptable amount of time that may lapse prior to the realization of the intent of the planting design.

Site Standard

Rootball Size: The depth of the rootball shall be measured from the top of the ball, which in all cases shall begin at the root flare. Rootballs with diameters less than 20" – depth not less than 65% of the rootball diameter. Rootballs with diameters greater than or equal to 20" – depth not less than 60% of the rootball diameter.
Compliance: The KUB website for 'Plant Smart' shall be consulted to minimize the issues related to overhead utilities.

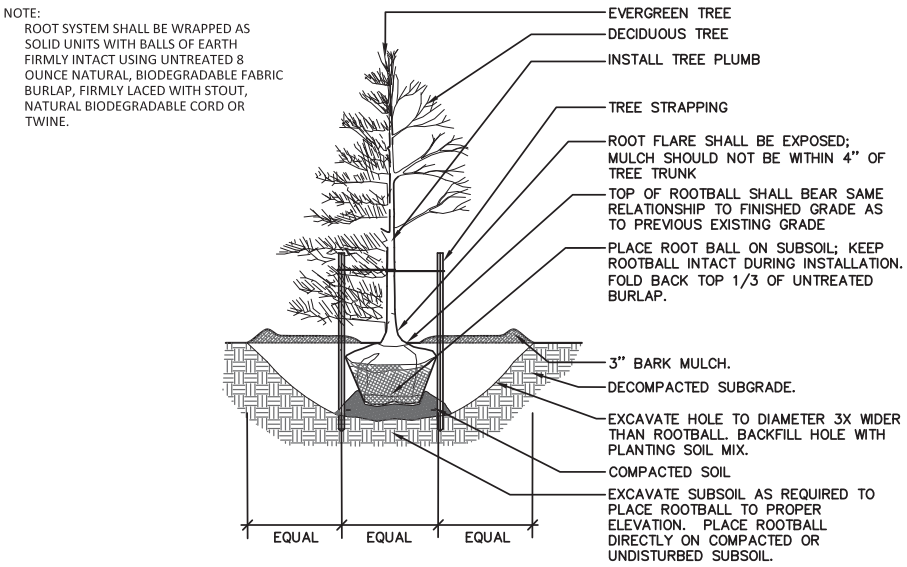

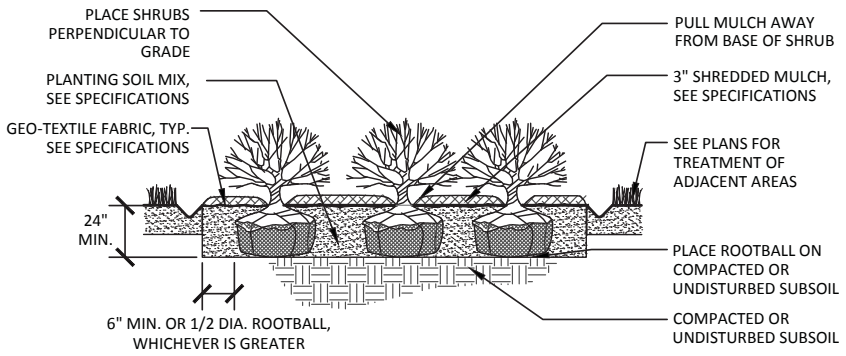

5.20 TREE PROTECTION

Application

The University's tree collection shall be protected during all construction activities that intrude upon the drip line of campus trees. If possible, an arborist shall be consulted to ensure adequate tree protection prior to the beginning of construction.

Site Standard

Construction Fencing: During construction, trees identified for protection shall have a stable construction fence installed at the drip line of the entire tree.
Utility Work: During utility trenching, care shall be taken to not infringe upon the drip line of trees. If utility work must be done within the dripline, line boring is preferred to trenching.

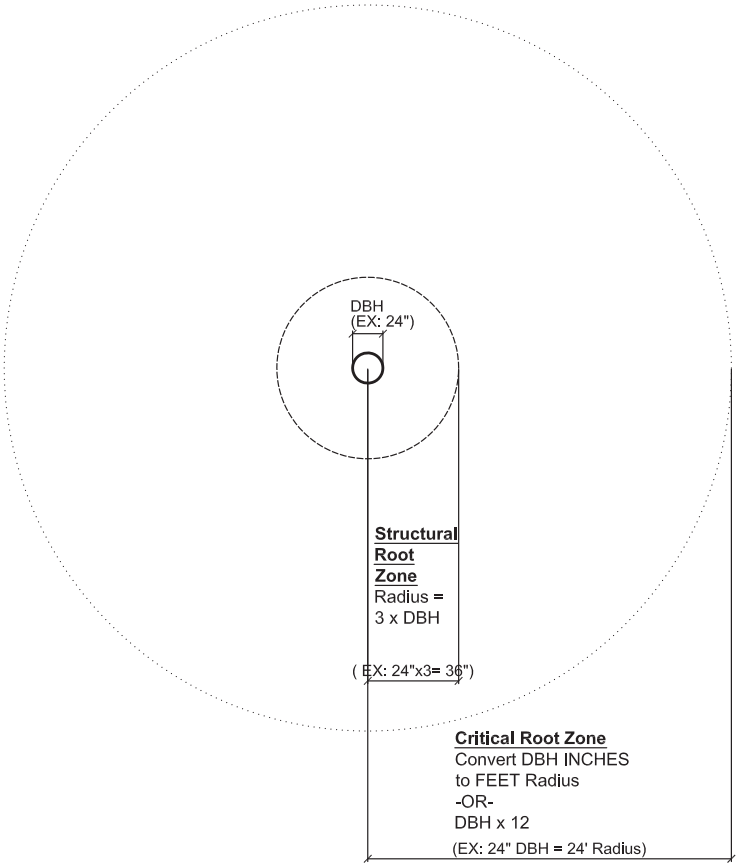

NOTES:

Structural Root Zone
The area around the tree that cannot be compromised without compromising the structural stability of the tree.

Critical Root Zone
Roots that supply nutrients to the tree. Most trees can survive 20% loss of its critical roots.
Cleanly cutting roots before construction is recommended to prevent infection/rot.
DO NOT allow construction equipment to 'rip' or 'tear' roots.

5.21 TREE STAKING

Application

Tree stakes shall be installed for all new tree planting to ensure proper establishment. Use tall vertical T-post tree stakes and horizontally placed strapping to stabilize tree stems from wind and settlement. Guys shall be soft polypropylene, woven strapping, rounded edges all sides to prevent bark damage. 900-pound test strength. Olive green color. Tree stake and strapping shall be removed after one year.

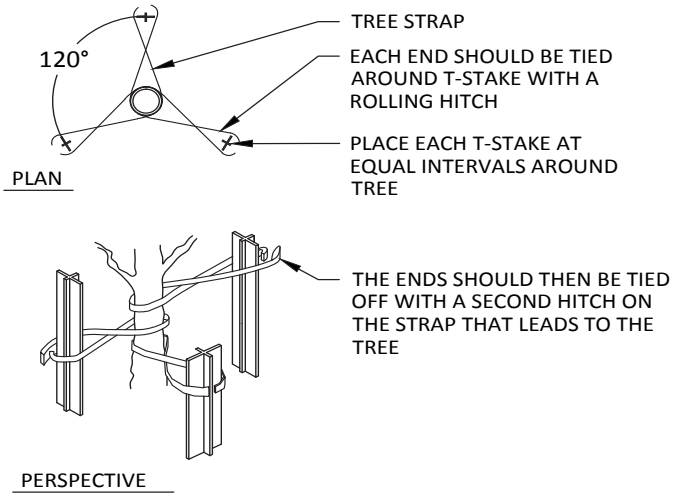

NOTES:

1. TREE STRAP SHALL BE FASTENED TO STAKES IN A MANNER WHICH PERMITS TREE MOVEMENT AND SUPPORTS THE TREE.
2. STRAP SHALL BE GREEN, 3/4" WIDE POLYPROPYLENE MATERIAL, 900 LBS. BREAK STRENGTH.

INTRODUCTION

While essential to the operation of the University, utilities and service areas serve the campus best when they are functioning well but are not seen. Existing utilities on campus are underground and overhead. It is recommended, where possible, that every effort be made to place utilities underground. This reduces visual clutter and makes utilities less susceptible to environmental outages.

Included in This Section

6.1 Service Areas
6.2 Irrigation
6.3 Drain Inlets
6.4 Utility Manhole Cover
6.5 Lockable Utility Manhole Cover
6.6 Outdoor Electrical Outlets

Implementation

- All materials shall conform to the Site Standards
- Proper utility coordination is vital to the success of the campus landscape. Coordination with utility providers during design will result in fewer conflicts and help fulfill the campus landscape vision.
- Products and equipment shall follow manufacturer's recommendations for installation and/or mounting. Facilities Services shall be notified of any new installation of furnishings and equipment to ensure compliance with the campus landscape vision.
- The City of Knoxville and the Knoxville Utility Board (KUB) provide critical services to campus, and communication and collaboration are key to the continued success of the University. As future projects are developed, the University should work with the City of Knoxville and the KUB and other local utility companies to ensure the campus landscape vision is met.
- The existing campus condition contains overhead utilities and adds to the visual clutter. It is recommended that overhead utilities be buried underground when and where possible.
- All site standards shall be implemented from the face of any building. Any nonconforming site standard beyond this limit will require approval of the Campus Planning and Design Committee.

6.1 SERVICE AREAS

Application

Service areas shall be approached in a site specific manner. If possible, topography should be used to diminish the visual impacts of service areas. The appropriate use of walls and plantings can aid in screening service areas.

When possible, service equipment and utilities shall be consolidated into service areas. (See 2.15 SCREEN WALLS) Service areas shall be able to handle heavy duty truck traffic.

6.2 IRRIGATION

Application

All new planting improvements shall be irrigated with an automatic irrigation system that is designed to meet the needs of the plantings while taking into account the soil and microclimate conditions of the irrigated area. The irrigation system shall be designed to provide 100% irrigation coverage for all trees, shrubs, turf and seasonal color beds. Turf, shrubs and seasonal color beds shall be irrigated on separate zones.

Irrigation systems shall be designed for efficiency and water conservation. Systems shall include rain sensors. Local rain sensors or a central weather station shall be incorporated into the system to provide weather-related data to ensure proper irrigation use. All systems shall be designed compatible with a future central control system. It is recommended that new irrigation systems be designed to include remote controller operation through the use of radio control systems.

When possible, captured rainwater should be utilized in irrigation system design. It is recommended that existing non-irrigated areas be retrofitted to include automatic irrigation.

Site Standard

Irrigation controller:
Rain Bird model ESP-LXD with IQ Network Communication

Communication Cartridge and Accessories:
IQ4600 IQNCCRS (RS-232) Installed in the controller
IQ4630 IQSSRADIO Installed in the controller
GSP-TRA9023NP Antenna to be installed as needed

System wiring: 2-wire technology with all valves, solenoids, and decoders compatible with the Rain Bird ESP-LXD controller. Wire size is to be 12 AWG/3.32 mm2 solid core twisted pair from Rainbird or approved equivalent.

Grounding: 2-wire system shall be grounded and surge protected per manufacturer specifications

Wire splices: Enclosed in DBR and/or DBY insulator tube connectors

Water meter: A seperate 2” water meter meeting Knoxville Utility Board smart meter requirements. Meter box will have a manual drain.

Backflow device: 2” minimum. Mounted on copper pipe (with aluminum housing for exterior installation) Mfr: Safe-T-Cover or Hotbox.

Mainline and lateral water lines: 2" minimum mainline. Schedule 40 PVC pipe. Class 200 PVC pipe is not acceptable. In areas where traditional sleeving is not feasible and piping is placed under paved areas to serve as a main or lateral waterline, schedule 80 PVC pipe shall be used. Irrigation Depth will be 12" below final grade for all lateral lines and 15" below final grade for all main lines Rainbird SPX-Flex will be the only polypipe used. Drip irrigation tubing will be limited to above-ground planters only.

Flow sensing device: Installed downstream from backflow device and upstream from nearest zone valve or system loop. The flow sensor is to be compatible with system controller.

Mainline isolation ball valves: Ball valve of line size installed at least every 200 feet for systems with a mainline of 500 feet or greater. Based on mainline complexity, consideration shall be given to systems less than 500 feet in length. A valve box shall be installed with each ball valve.

Zone isolation ball valves: Ball valve of line size installed up stream of each solenoid zone valve. Ball valve is to be installed in a valve box.

Quick coupling valves: Installed every 150-200 linear feet along the system mainline. All quick coupling valves are to be of brass construction with rubber cover and enclosed in a 10" round valve box with lockable cover. Secure quick coupler by mounting on a 1" Lasco brass insert Snap-Lok Swing Joint with stabilizer elbow. Provide a matching valve key and swivel adapter per location. The quick coupler is to be set at such height that the valve box will not interfere with the operation of the valve key.

Pipe Sleeves: One 4" and one 2" minimum. Sleeves will be stubbed above final grade and capped.

Valve box: Box will be on brick supports with geo-textile under box. Top of box lid will be flush will final grade and contour. Manufacturer will be Rainbird or Old Castle

Heads and Nozzles: Rainbird heads are to be used and sized appropriately to supply adequate coverage for turf and landscape planting areas.

6.3 DRAIN INLETS

Application

All structures shall be sized appropriately according to the surface treatment and the size of the catchment area. When plazas and open areas require drainage, smaller structures are preferred so the areas are not disrupted with larger inlet structures. Structures may be placed in lawn, planting beds, and pavement.

Set rim elevations to ensure proper drainage and that water is not standing near any structure.

Site Standard

Manufacturer: ADS

Product: Nyloplast Drain Basins and Inline Drain Grates

Styles: Beehive, Dome, Square, Round

Contact: (800) 821-6710

Website: www.ads-pipe.com

6.4 UTILITY MANHOLE COVER

Application

All utility manhole covers shall meet the City of Knoxville Department of Engineering standards for traffic bearing manhole frames and covers. Type B Manhole Cover shall not be placed in sidewalks or greenways.

Site Standard

Product: Utility manhole cover

Manufacturer: Contact City of Knoxville Civil Engineering Division

Contact: (865) 215-2148

Website: cityofknoxville.org

Compliance: City of Knoxville Department of Engineering: Standard for traffic bearing manhole frames and covers.

- 1/2" minimum height raised lettering
- ASTM A48 Class 30.
- Environmental statement on manhole cover
- Two coats of bituminous paint

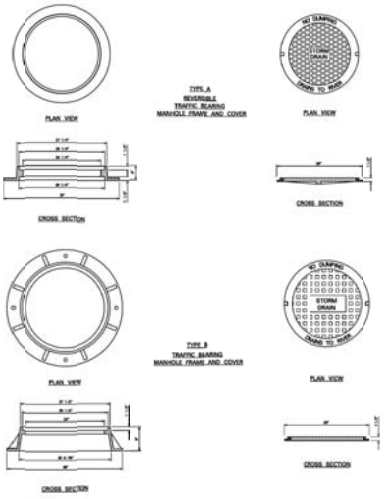

6.5 LOCKABLE UTILITY MANHOLE COVER

Application

A lockable cover shall be used in areas where security is a concern and Homeland Security Standards need to be met.

Site Standard

Manufacturer: McGard

Model: Fibershield Manhole Security Device

Contact: 888-888-9192

Website: www.mcgard.com

6.6 OUTDOOR ELECTRICAL OUTLETS

Application

In locations where site walls and seat walls are adjacent to plazas and other outdoor gathering areas, outdoor rated, weatherproof, GFCI electrical outlets shall be installed at regular intervals to accommodate computer use. PVC sleeving to be used under all walkways for future cable needs. Outlets are to be mounted in the vertical position.